YAMAHA

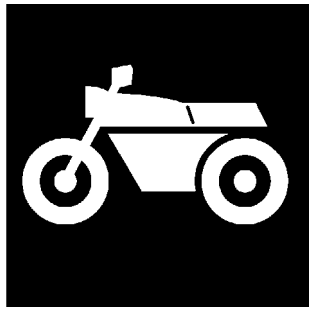

PARTS CATALOGUE

YZF-R6R (5SL3) U49
YZF-R6RC (5SL4) CALIFORNIA
YZF-R6R (5SL5) CANADA

1B5SL-100E3

(2B5SL-100E3)

YAMAHA GENUINE Parts & Accessories

A2

YZF-R6R/YZF-R6RC
PARTS CATALOGUE
©2003 by Yamaha Motor Co., Ltd.
1st edition, December 2003
All rights reserved.
Any reprinting or unauthorized use
without the written permission of
Yamaha Motor Co., Ltd.
is expressly prohibited.
Printed in Japan.

A3

YZF-R6R/YZF-R6RC

A4

FOREWORD

This Parts Catalogue is related to the parts for the model(s) on the cover page. When you are ordering replacement parts, please refer to this Parts Catalogue and quote both part numbers and part names correctly.

1. Modifications or additions which have been made after the issue of the Parts Catalogue will be announced in the Parts News.
   It is advisable that you make the necessary corrections to the Parts Catalogue according to the Parts News.

2. Abbreviations
   The following abbreviations are used in this Parts Catalogue.

   "UR" Use specified parts number.
   "UN" Use as many as needed.
   "AP" Alternate Parts
   "LM" Locally Made (Parts need to be ordered locally)
   "F#" Frame No. (Applicable machine No.)
   "O/S" Over Size

3. The number of components for assembly
   - Parts, which are to be supplied in an assembly, are listed with a dot (.) in front of the part name as shown below.
   - The numeral appearing to the right of each component part indicates the quantity of parts for each assembly unit.

PART NO.	DESCRIPTION	Q'TY	REMARKS
2F5–83310–60	FRONT FLASHER LIGHT ASSY	2	
115–83311–60	.BULB (6V–18W)	1	

4. Applicable colours of graphics are represented in the "REMARKS" as shown below.

PART NO.	DESCRIPTION	Q'TY	REMARKS
2N4–24110–00–X5	FUEL TANK COMP.	2	MXR
3J1–24240–10	.GRAPHIC, FUEL TANK	1	FOR MXR

5. Note that the illustrations for reference in finding parts numbers are not to be used for assembling. When assembling, please use the applicable service manual.

6. The asterisk (*) before a reference number indicates modified items after the first edition.

7. Applicable Serial No.

Engine Serial No.

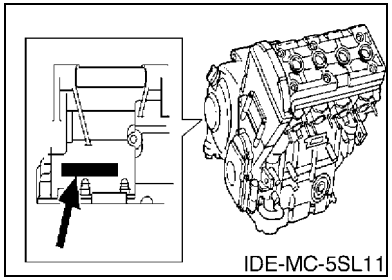

Frame Serial No.

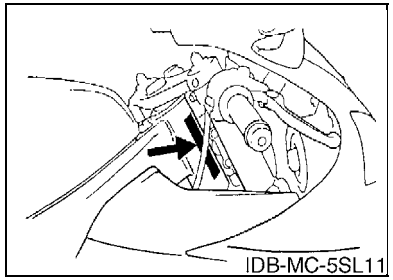

8. Applicable Colour Code (The (*) mark shows Model colour.)

Abbreviation	Colour Name	Colour Code
DPBMC(*)	DEEP PURPLISH BLUE METALLIC C	0564
LGB	LOW GLOSS BLACK	0098
MBL2	MAT BLACK 2	0582
S3(*)	SILVER 3	0791

MODEL LABEL

(1) A label called “Model Label” is affixed in the location as indicated in (3) below. When using this parts catalogue, please be sure to cross–reference the “model code – production code No.” in the catalogue with the “model code – production code No.” indicated on the Model Label affixed onto the product concerned.

(2) “Model Label” Indication

a b ○ xxxx – xxx ● x c	a: Model Type Code b: Production Code No. c: Colouring Type

○ 4TW1–010 ● A

(3) Model Label Affixing Location

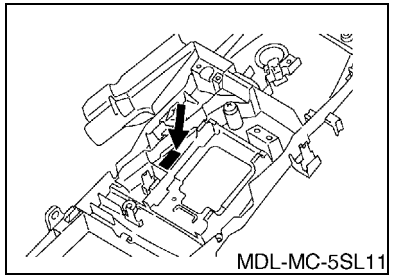

(4) Colouring Information

Model Code	Colouring Type Code	Colour Code	Colour Name	Abbreviation
5SL3	A	0564	DEEP PURPLISH BLUE METALLIC C	DPBMC
	B	0791	SILVER 3	S3
5SL4	A	0564	DEEP PURPLISH BLUE METALLIC C	DPBMC
	B	0791	SILVER 3	S3
5SL5	A	0564	DEEP PURPLISH BLUE METALLIC C	DPBMC
	B	0791	SILVER 3	S3

(5) Model Code – Production Code Number of Model Listed in This Parts Catalogue

Model Code	Production Code No.	Country (destination)	Model Code	Production Code No.	Country (destination)
5SL3	010	U49			
5SL4	010	CALIFORNIA			
5SL5	010	CANADA			

CONTENTS

ENGINE

CYLINDER B2
CRANKSHAFT & PISTON B3
VALVE B4
CAMSHAFT & CHAIN B6
WATER PUMP B7
RADIATOR & HOSE B8
OIL PUMP B10
OIL CLEANER B11
INTAKE B12
INTAKE 2 ..... B14
AIR INDUCTION SYSTEM C2
EXHAUST C3
CRANKCASE C4
CRANKCASE COVER 1 ..... C6
STARTER C8
CLUTCH C9
TRANSMISSION C11
SHIFT CAM & FORK C13
SHIFT SHAFT C14

CHASSIS

FRAME C15
FENDER D3
SIDE COVER D5
REAR ARM D6
REAR SUSPENSION D8
STEERING D9
FRONT FORK D10
FUEL TANK D12
SEAT D14
FRONT WHEEL D15
FRONT BRAKE CALIPER E2
REAR WHEEL E3
REAR BRAKE CALIPER E5
STEERING HANDLE & CABLE E6
FRONT MASTER CYLINDER E7
STAND & FOOTREST E9
REAR MASTER CYLINDER E12
COWLING 1 ..... E14
COWLING 2 ..... F2
GENERATOR F5
STARTING MOTOR F6
FLASHER LIGHT F7
METER F8
HEADLIGHT F9
TAILLIGHT F10
HANDLE SWITCH & LEVER F11
ELECTRICAL 1 ..... F12
ELECTRICAL 2 ..... F14

INDEX

NUMERICAL INDEX M1

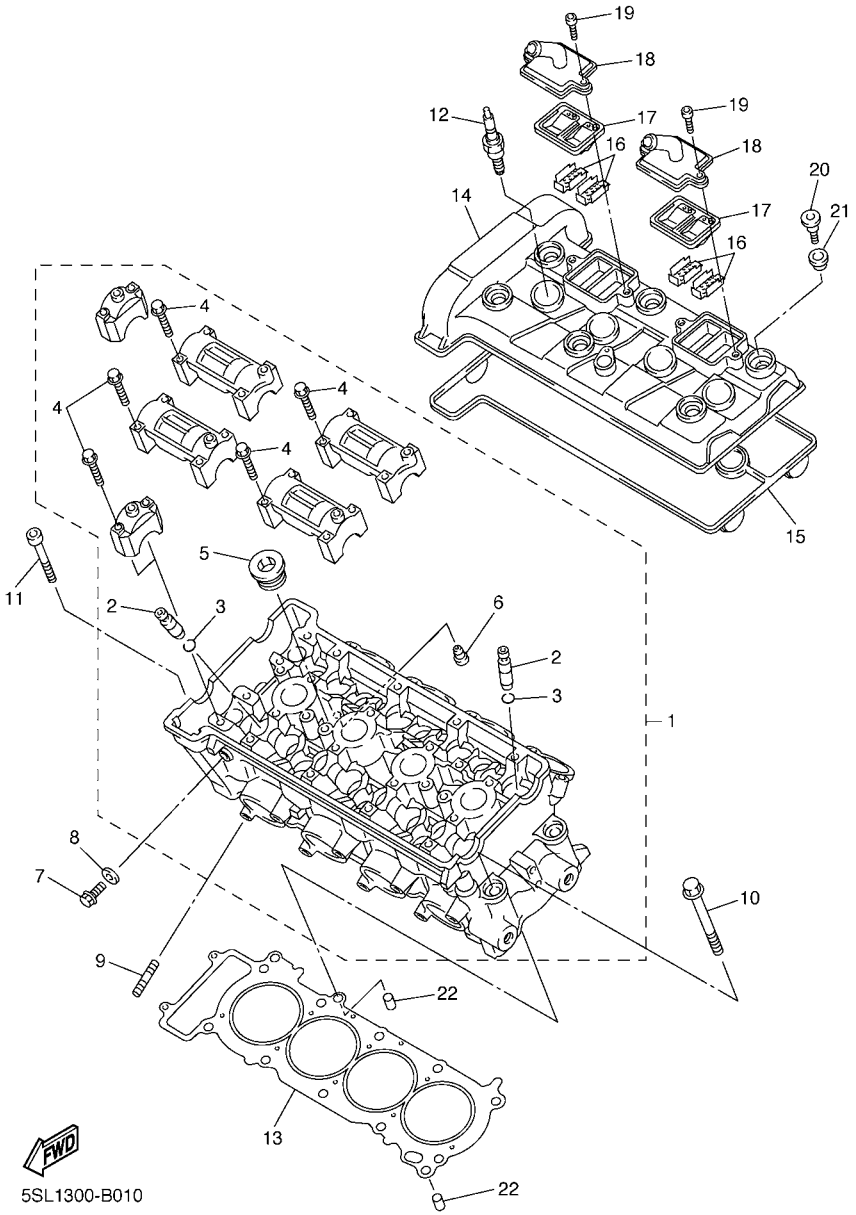

FIG. 1 CYLINDER

REF. NO.	PART NO.	DESCRIPTION	5SL3	5SL4	5SL5			REMARKS
1	5SL–11101–00	CYLINDER HEAD ASSY	1	1	1			
2	5EB–11133–10	.GUIDE, VALVE 1	16	16	16			
3	93440–10153	.CIRCLIP	16	16	16			
4	90105–06027	.BOLT, FLANGE	20	20	20			
5	90340–20090	.PLUG, STRAIGHT SCREW	3	3	3			
6	11H–15138–00	.NOZZLE 1	1	1	1			
7	95027–08012	BOLT, FLANGE	1	1	1			
8	90430–08119	GASKET	1	1	1			
9	95617–08625	BOLT, STUD	8	8	8			
10	90119–10003	BOLT, WITH WASHER	10	10	10			
11	91317–06060	BOLT	2	2	2			
12	94701–00402	PLUG, SPARK (NGK CR10EK)	4	4	4			
13	5SL–11181–00	GASKET, CYLINDER HEAD 1	1	1	1			
14	5SL–11191–00	COVER, CYLINDER HEAD 1	1	1	1			
15	5SL–11193–00	GASKET, HEAD COVER 1	1	1	1			
16	5SL–1482K–00	PLATE	4	4	4			
17	5SL–14890–00	REED VALVE ASSY	2	2	2			
18	5SL–14899–00	CAP, CASE	2	2	2			
19	90110–06073	BOLT, HEXAGON SOCKET HEAD	4	4	4			
20	90109–066F0	BOLT	6	6	6			
21	4KG–1111G–00	RUBBER, MOUNT 1	6	6	6			
22	99530–10114	PIN, DOWEL	2	2	2			

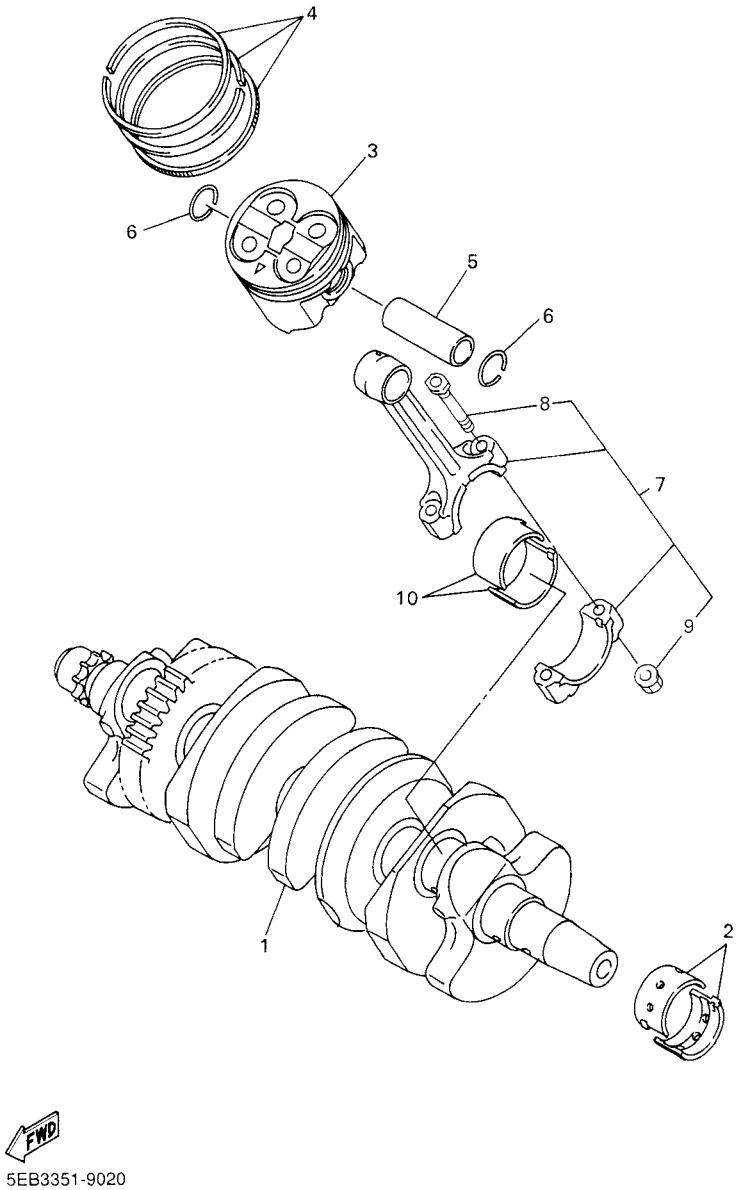

FIG. 2 CRANKSHAFT & PISTON

REF. NO.	PART NO.	DESCRIPTION	5SL3	5SL4	5SL5			REMARKS
1	5SL–11411–00	CRANKSHAFT	1	1	1			
2	5EB–11416–A0	PLANE BEARING, CRANKSHAFT 1	10	10	10			UR WHITE
	5EB–11416–00	PLANE BEARING, CRANKSHAFT 1	10	10	10			UR BLUE
	5EB–11416–10	PLANE BEARING, CRANKSHAFT 1	10	10	10			UR BLACK
	5EB–11416–20	PLANE BEARING, CRANKSHAFT 1	10	10	10			UR BROWN
	5EB–11416–30	PLANE BEARING, CRANKSHAFT 1	10	10	10			UR GREEN
3	5SL–11631–00	PISTON (STD)	4	4	4			
4	5SL–11603–00	PISTON RING SET (STD)	4	4	4			
5	5SL–11633–00	PIN, PISTON	4	4	4			
6	93450–17129	CIRCLIP	8	8	8			
7	5SL–11650–00	CONNECTING ROD ASSY	4	4	4			
8	5SL–11654–00	.BOLT, CONNECTING ROD	2	2	2			
9	90179–07652	.NUT	2	2	2			
10	5SL–11656–00	PLANE BEARING, CONNECTING ROD	8	8	8			UR BLUE
	5SL–11656–10	PLANE BEARING, CONNECTING ROD	8	8	8			UR BLACK
	5SL–11656–20	PLANE BEARING, CONNECTING ROD	8	8	8			UR BROWN
	5SL–11656–30	PLANE BEARING, CONNECTING ROD	8	8	8			UR GREEN

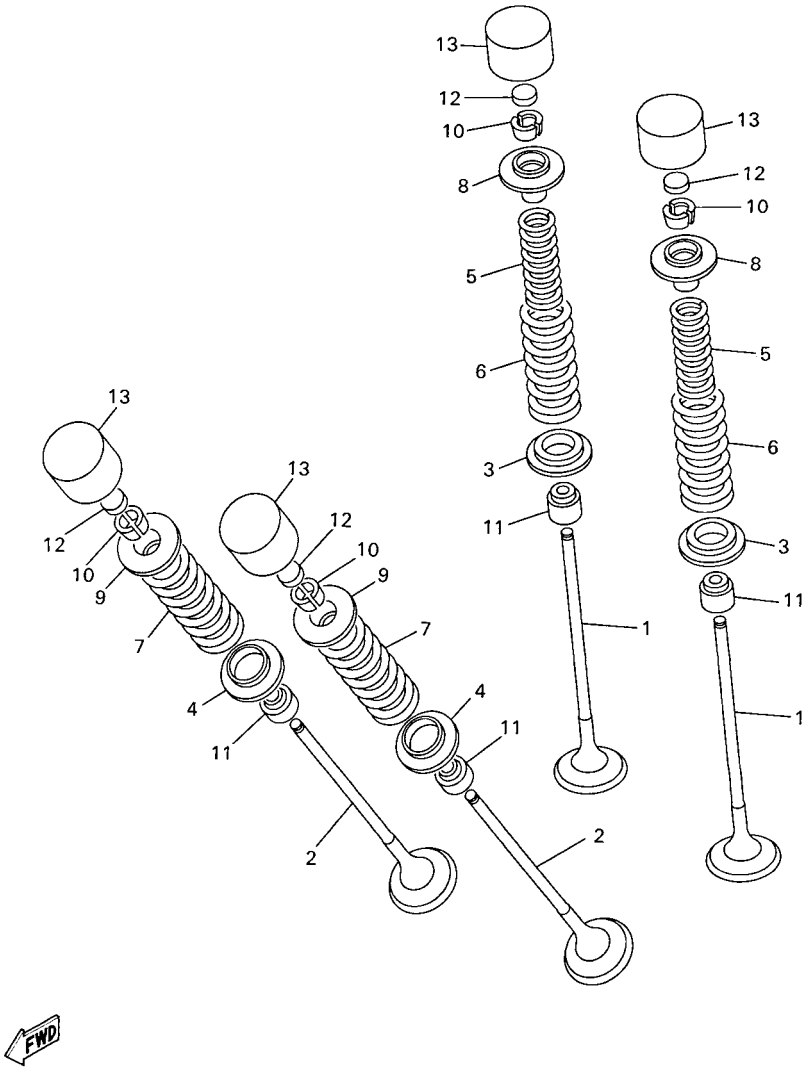

5EB3351-9030

FIG. 3 VALVE

REF. NO.	PART NO.	DESCRIPTION	5SL3	5SL4	5SL5			REMARKS
1	5EB–12111–00	VALVE, INTAKE	8	8	8			
2	5SL–12121–00	VALVE, EXHAUST	8	8	8			
3	5SL–12116–00	SEAT, VALVE SPRING	8	8	8			
4	5EB–12126–00	SEAT, VALVE SPRING 2	8	8	8			
5	5SL–12113–00	SPRING, VALVE INNER	8	8	8			
6	5SL–12114–00	SPRING, VALVE OUTER	8	8	8			
7	5EB–12124–01	SPRING, VALVE OUTER	8	8	8			
8	5EB–12117–00	RETAINER, VALVE SPRING	8	8	8			
9	5EB–12127–00	RETAINER, VALVE SPRING	8	8	8			
10	1HX–12118–00	COTTER, VALVE	32	32	32			
11	4TV–12119–00	SEAL, VALVE STEM	16	16	16			
12	1HX–12168–00	PAD, ADJUSTING 2 (1.20)	16	16	16			UR
	1HX–12168–20	PAD, ADJUSTING 2 (1.25)	16	16	16			UR
	1HX–12168–40	PAD, ADJUSTING 2 (1.30)	16	16	16			UR
	1HX–12168–60	PAD, ADJUSTING 2 (1.35)	16	16	16			UR
	1HX–12168–80	PAD, ADJUSTING 2 (1.40)	16	16	16			UR
	1HX–12168–A0	PAD, ADJUSTING 2 (1.45)	16	16	16			UR
	1HX–12168–F0	PAD, ADJUSTING 2 (1.50)	16	16	16			UR
	1HX–12168–H1	PAD, ADJUSTING 2 (1.55)	16	16	16			UR
	1HX–12168–K1	PAD, ADJUSTING 2 (1.60)	16	16	16			UR
	1HX–12168–M1	PAD, ADJUSTING 2 (1.65)	16	16	16			UR
	1HX–12168–R1	PAD, ADJUSTING 2 (1.70)	16	16	16			UR
	1HX–12168–U1	PAD, ADJUSTING 2 (1.75)	16	16	16			UR
	1HX–12168–W1	PAD, ADJUSTING 2 (1.80)	16	16	16			UR
	1HX–12168–Y1	PAD, ADJUSTING 2 (1.85)	16	16	16			UR
	1HX–12169–11	PAD, ADJUSTING 2 (1.90)	16	16	16			UR
	1HX–12169–31	PAD, ADJUSTING 2 (1.95)	16	16	16			UR

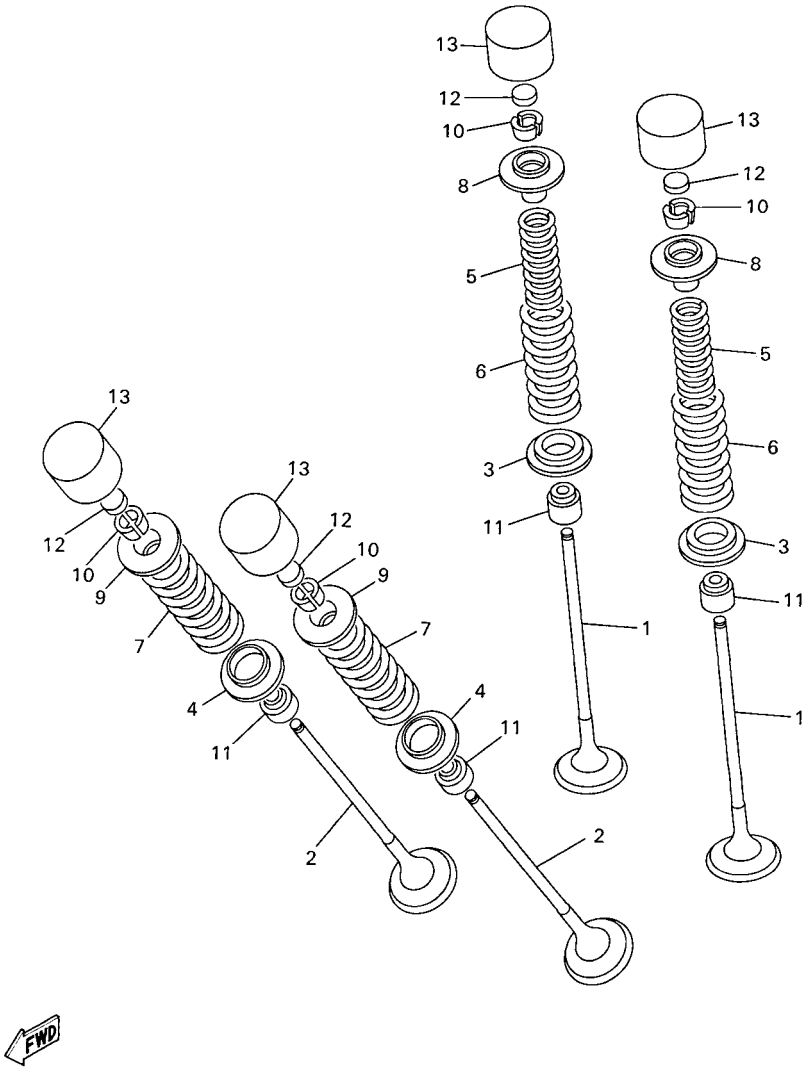

5EB3351-9030

FIG. 3 VALVE

REF. NO.	PART NO.	DESCRIPTION	5SL3	5SL4	5SL5			REMARKS
12	1HX–12169–50	PAD, ADJUSTING 2 (2.00)	16	16	16			UR
	1HX–12169–70	PAD, ADJUSTING 2 (2.05)	16	16	16			UR
	1HX–12169–90	PAD, ADJUSTING 2 (2.10)	16	16	16			UR
	1HX–12169–E0	PAD, ADJUSTING 2 (2.15)	16	16	16			UR
	1HX–12169–G0	PAD, ADJUSTING 2 (2.20)	16	16	16			UR
	1HX–12169–J0	PAD, ADJUSTING 2 (2.25)	16	16	16			UR
	1HX–12169–L0	PAD, ADJUSTING 2 (2.30)	16	16	16			UR
	1HX–12169–N0	PAD, ADJUSTING 2 (2.35)	16	16	16			UR
	1HX–12169–T0	PAD, ADJUSTING 2 (2.40)	16	16	16			UR
13	5EB–12153–20	LIFTER, VALVE	16	16	16			UR BLUE
	5EB–12153–30	LIFTER, VALVE	16	16	16			UR RED
	5EB–12153–09	LIFTER, VALVE (O/S)	16	16	16			AP GREEN

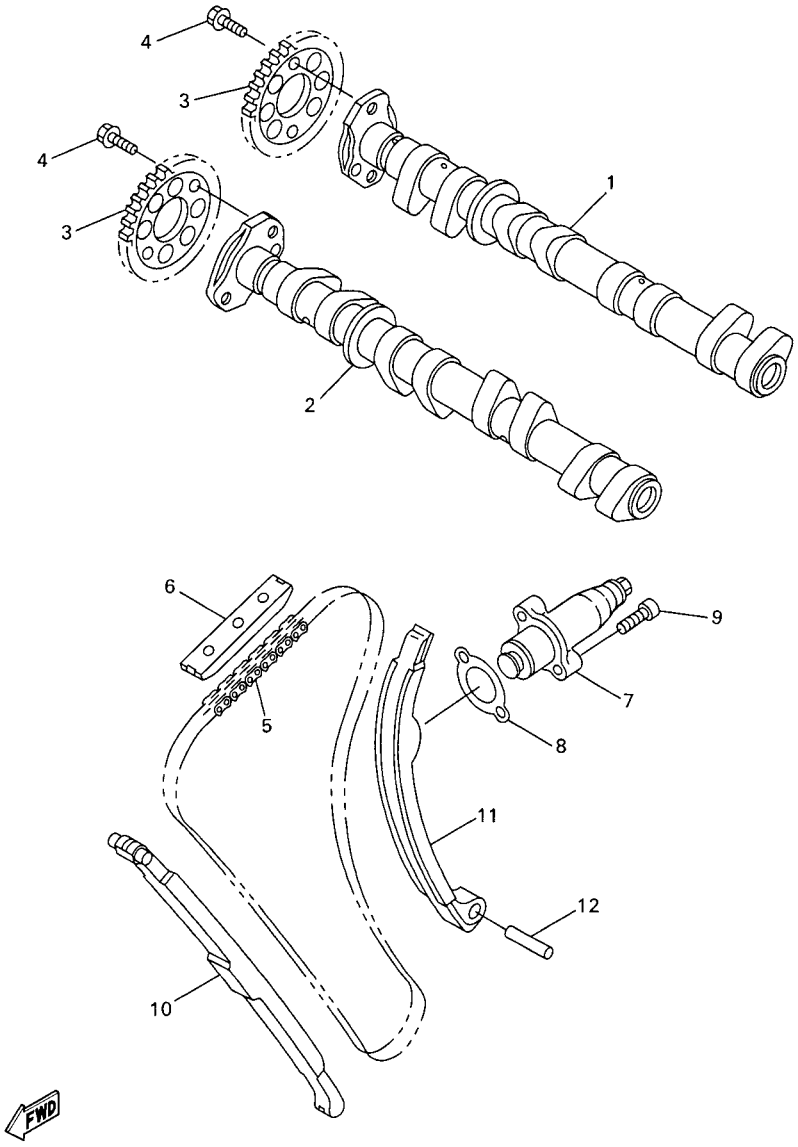

FIG. 4 CAMSHAFT & CHAIN

REF. NO.	PART NO.	DESCRIPTION	5SL3	5SL4	5SL5			REMARKS
1	5SL–12170–00	CAMSHAFT ASSY 1	1	1	1			
2	5SL–12180–00	CAMSHAFT ASSY 2	1	1	1			
3	5EB–12176–00	SPROCKET, CAM CHAIN	2	2	2			
4	90105–07342	BOLT, FLANGE	4	4	4			
5	94591–49120	CHAIN	1	1	1			
6	5BE–12241–00	GUIDE, STOPPER 2	1	1	1			
7	5SL–12210–10	TENSIONER ASSY, CAM CHAIN	1	1	1			
8	4FM–12213–00	GASKET, TENSIONER CASE	1	1	1			
9	91317–06025	BOLT	2	2	2			
10	5EB–12251–00	DAMPER, CHAIN 1	1	1	1			
11	5EB–12252–10	DAMPER, CHAIN 2	1	1	1			
12	93607–44190	PIN, DOWEL	1	1	1			

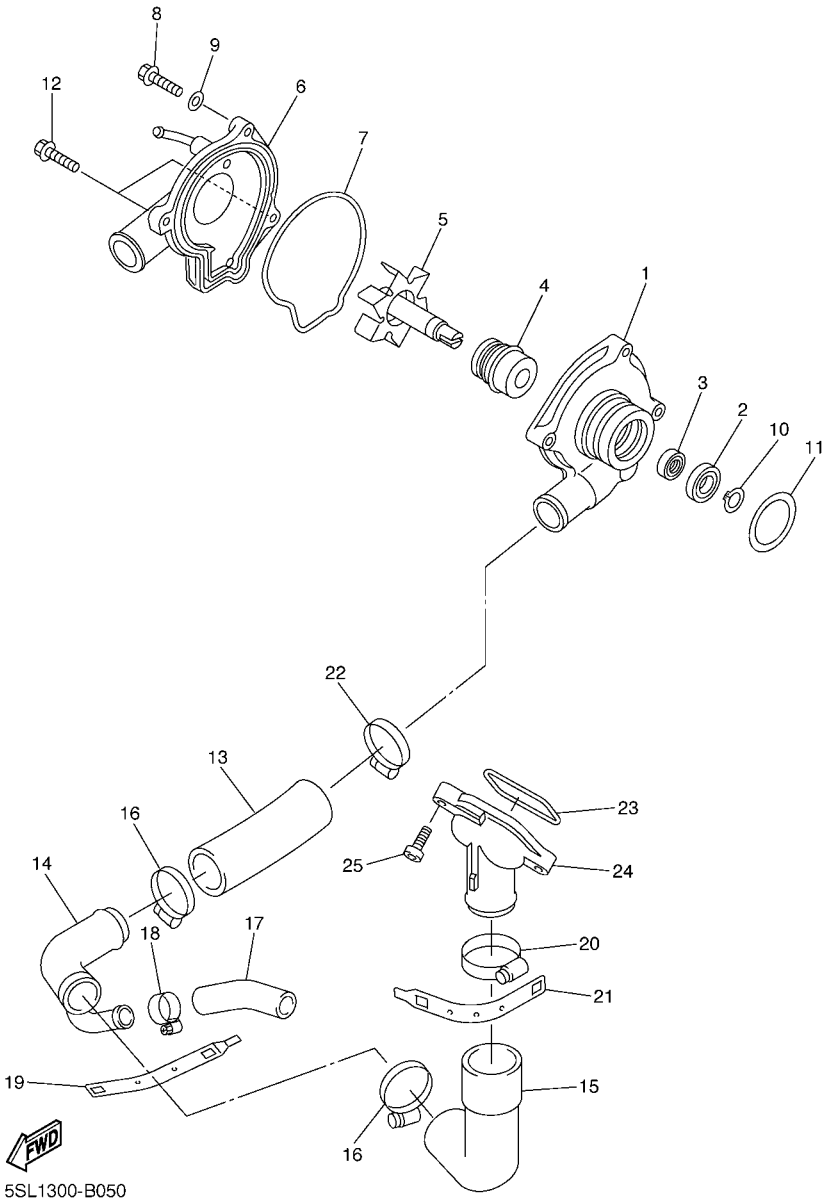

FIG. 5 WATER PUMP

REF. NO.	PART NO.	DESCRIPTION	5SL3	5SL4	5SL5			REMARKS
1	5EB–12421–00	HOUSING, WATER PUMP	1	1	1			
2	93306–00106	BEARING	1	1	1			
3	93101–12173	OIL SEAL	1	1	1			
4	11H–12438–10	SEAL, MECHANICAL	1	1	1			
5	5EB–12450–00	IMPELLER SHAFT ASSY	1	1	1			
6	5SL–12422–00	COVER, HOUSING	1	1	1			
7	5EB–12439–00	O-RING	1	1	1			
8	95024–06020	BOLT, FLANGE	2	2	2			
9	90430–06014	GASKET	1	1	1			
10	99009–12400	CIRCLIP	1	1	1			
11	93210–33133	O-RING	1	1	1			
12	90110–06149	BOLT, HEXAGON SOCKET HEAD	2	2	2			
13	4NK–12579–00	HOSE 4	1	1	1			
14	5EB–12581–00	JOINT, HOSE 1	1	1	1			
15	5EB–12577–00	HOSE 2	1	1	1			
16	90450–35001	HOSE CLAMP ASSY	2	2	2			
17	5SL–12588–00	HOSE 5	1	1	1			
18	90450–22017	HOSE CLAMP ASSY	1	1	1			
19	5GV–1246E–00	COVER 2	1	1	1			
20	90450–38040	HOSE CLAMP ASSY	1	1	1			
21	5GV–1246A–00	COVER 1	1	1	1			
22	90450–32001	HOSE CLAMP ASSY	1	1	1			
23	93210–47675	O-RING	1	1	1			
24	5EB–12469–00	JOINT 1	1	1	1			
25	95027–06020	BOLT, FLANGE	2	2	2			

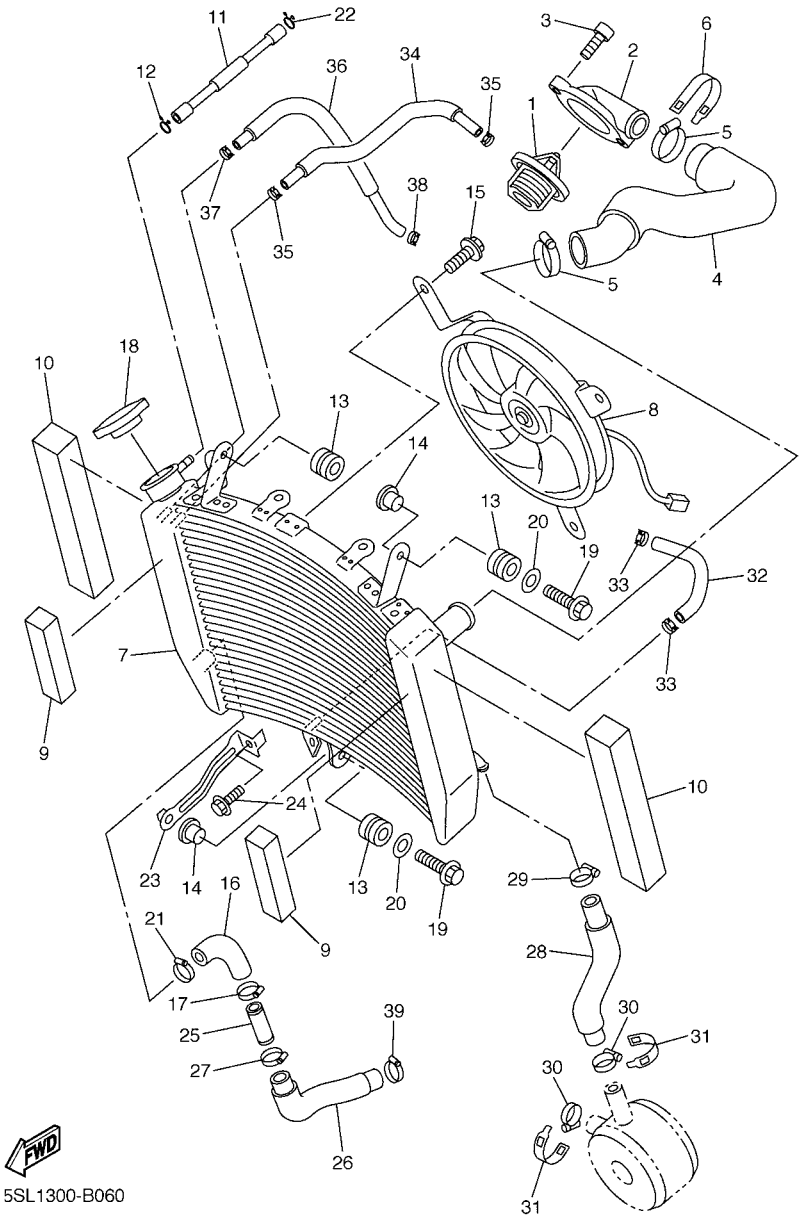

FIG. 6 RADIATOR & HOSE

REF. NO.	PART NO.	DESCRIPTION	5SL3	5SL4	5SL5			REMARKS
1	5SL–12410–00	THERMOSTAT ASSY	1	1	1			
2	5EB–12413–00	COVER, THERMOSTAT	1	1	1			
3	91317–06020	BOLT	2	2	2			
4	5SL–12578–00	HOSE 3	1	1	1			
5	90450–35001	HOSE CLAMP ASSY	2	2	2			
6	5GV–1246E–00	COVER 2	1	1	1			
7	5SL–12461–00	RADIATOR ASSY	1	1	1			
8	5SL–12405–00	BLOWER ASSY	1	1	1			
9	5EB–12659–00	DAMPER, AIR SHROUD 2	2	2	2			
10	5EB–12668–00	DAMPER, AIR SHROUD 3	2	2	2			
11	90445–08016	HOSE	1	1	1			
12	90467–08075	CLIP	1	1	1			
13	90480–15363	GROMMET	3	3	3			
14	90387–07391	COLLAR	2	2	2			
15	5GJ–12675–00	BOLT, BLOWER HOLDING	3	3	3			
16	5SL–12579–00	HOSE 4	1	1	1			
17	90450–35001	HOSE CLAMP ASSY	1	1	1			
18	5SL–12462–00	CAP, RADIATOR	1	1	1			
19	90105–06040	BOLT, FLANGE	2	2	2			
20	90201–06071	WASHER, PLATE	2	2	2			
21	90450–35001	HOSE CLAMP ASSY	1	1	1			
22	90467–08075	CLIP	1	1	1			
23	5SL–1244E–00	BRACKET 1	1	1	1			
24	95827–06012	BOLT, FLANGE	1	1	1			
25	5SL–12582–00	JOINT, HOSE 2	1	1	1			
26	5SL–12551–00	HOSE 7	1	1	1			
27	90450–35001	HOSE CLAMP ASSY	1	1	1			

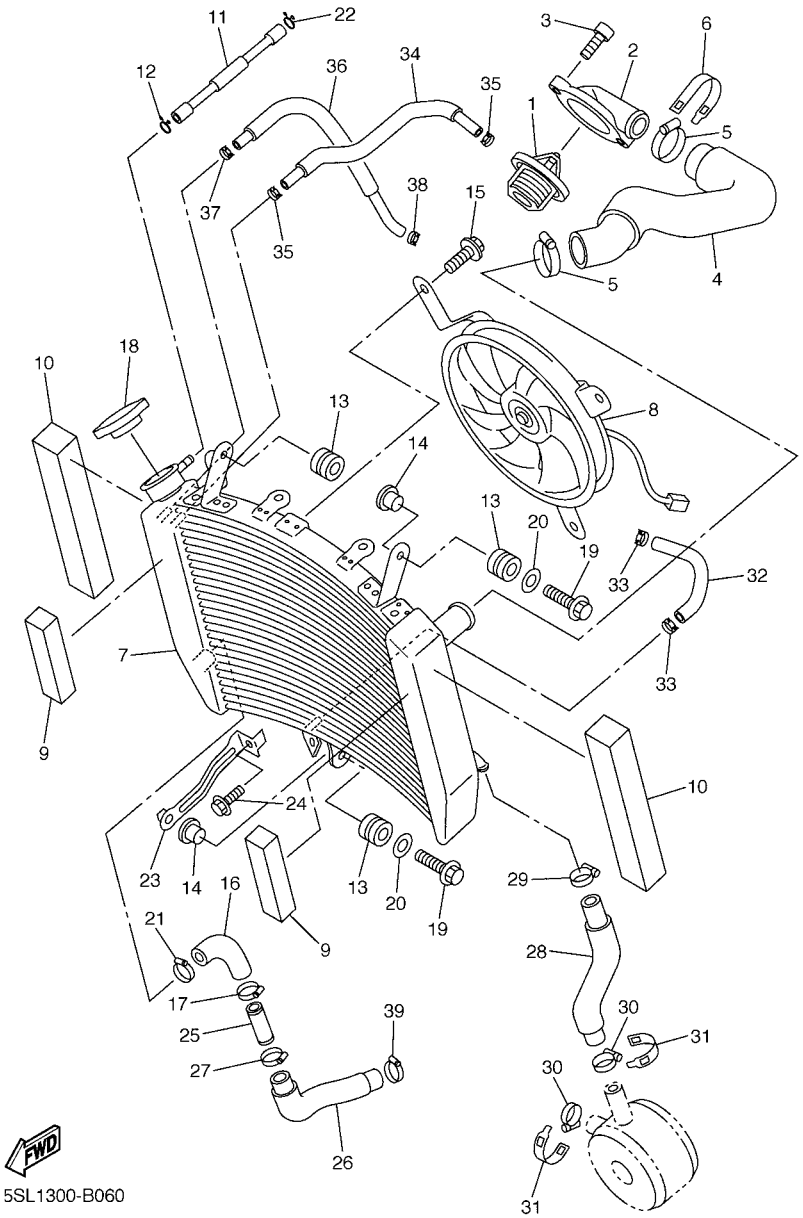

FIG. 6 RADIATOR & HOSE

REF. NO.	PART NO.	DESCRIPTION	5SL3	5SL4	5SL5			REMARKS
28	5SL–12589–01	HOSE 6	1	1	1			
29	90450–22017	HOSE CLAMP ASSY	1	1	1			
30	90450–25037	HOSE CLAMP ASSY	2	2	2			
31	5LV–1246F–00	COVER 3	2	2	2			
32	5SL–1243A–00	HOSE 1	1	1	1			
33	90467–11090	CLIP	2	2	2			
34	5SL–1243E–00	HOSE 2	1	1	1			
35	90467–11090	CLIP	2	2	2			
36	5SL–1244G–00	HOSE, 4	1	1	1			
37	90467–11090	CLIP	1	1	1			
38	90467–11090	CLIP	1	1	1			
39	90450–32001	HOSE CLAMP ASSY	1	1	1			

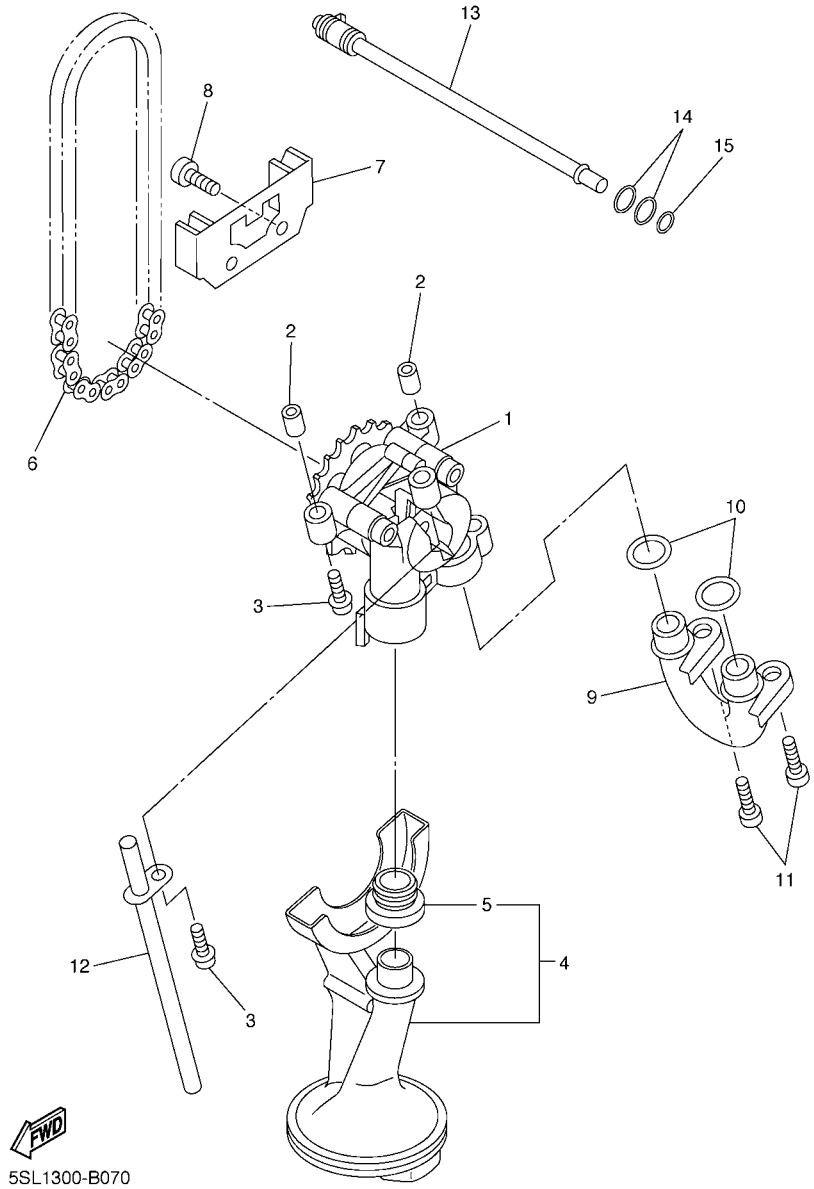

FIG. 7 OIL PUMP

REF. NO.	PART NO.	DESCRIPTION	5SL3	5SL4	5SL5			REMARKS
1	5MT–13300–00	OIL PUMP ASSY	1	1	1			
2	91808–17032	PIN, DOWEL	2	2	2			
3	90109–06031	BOLT	3	3	3			
4	5SL–13410–00	STRAINER HOUSING ASSY	1	1	1			
5	5EB–13415–00	.SEAL, OIL STRAINER	1	1	1			
6	94580–25080	CHAIN	1	1	1			
7	5EB–13898–00	HOLDER	1	1	1			
8	90110–06041	BOLT, HEXAGON SOCKET HEAD	2	2	2			
9	5JW–13416–00	PIPE, OIL 1	1	1	1			
10	93210–14003	O-RING	2	2	2			
11	90110–06041	BOLT, HEXAGON SOCKET HEAD	2	2	2			
12	5EB–13161–00	PIPE, DELIVERY 1	1	1	1			
13	5EB–1316E–00	PIPE, DELIVERY 5	1	1	1			
14	93210–09165	O-RING	2	2	2			
15	93210–06667	O-RING	1	1	1			

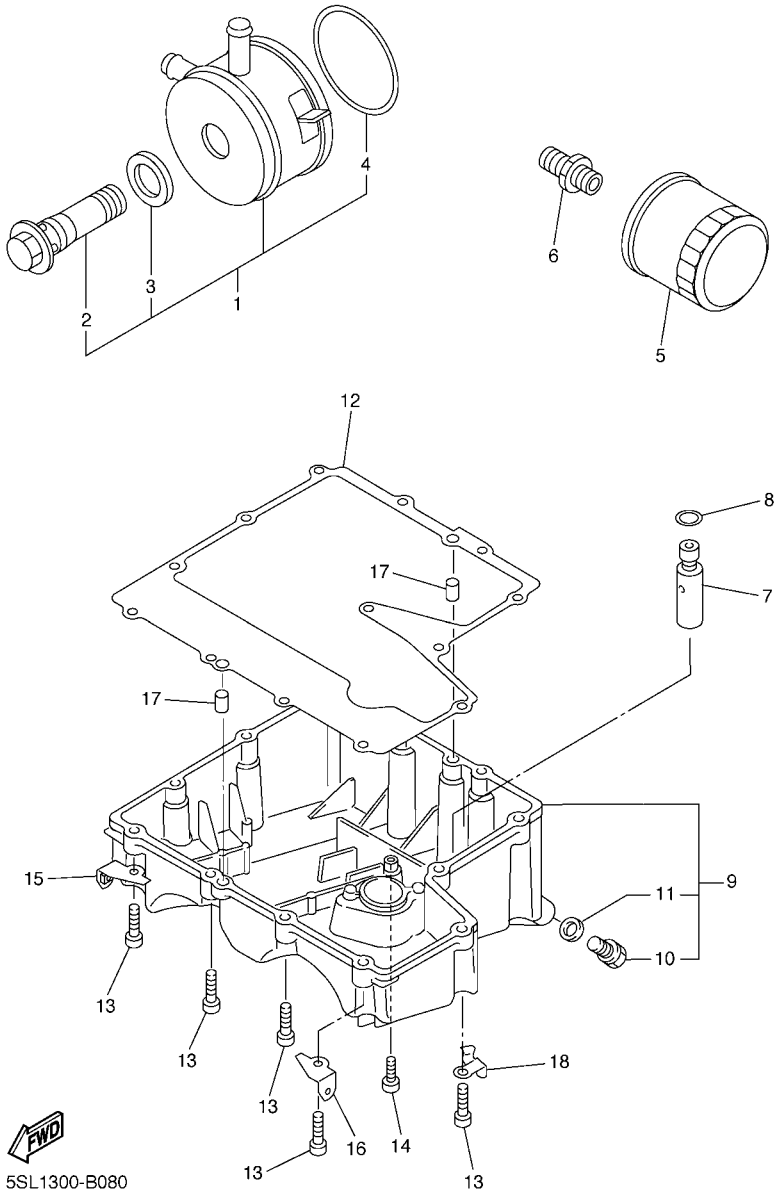

FIG. 8 OIL CLEANER

REF. NO.	PART NO.	DESCRIPTION	5SL3	5SL4	5SL5			REMARKS
1	5EB–13470–00	OIL COOLER ASSY	1	1	1			
2	5EB–12822–00	.BOLT, UNION	1	1	1			
3	5EB–13475–00	.GASKET	1	1	1			
4	4JH–13473–00	.O-RING	1	1	1			
5	5GH–13440–00	ELEMENT ASSY, OIL CLEANER	1	1	1			
6	90401–20145	BOLT, UNION	1	1	1			
7	3KS–13490–00	RELIEF VALVE ASSY	1	1	1			
8	93210–15566	O-RING	1	1	1			
9	5SL–13417–00	COVER, STRAINER	1	1	1			
10	90340–14132	.PLUG, STRAIGHT SCREW	1	1	1			
11	214–11198–01	.GASKET	1	1	1			
12	5SL–13414–00	GASKET, STRAINER COVER	1	1	1			
13	91317–06025	BOLT	12	12	12			
14	90110–06020	BOLT, HEXAGON SOCKET HEAD	1	1	1			
15	5EB–2836E–00	BRACKET 2	1	1	1			
16	5EB–2836A–00	BRACKET 1	1	1	1			
17	99530–08012	PIN, DOWEL	2	2	2			
18	90465–10030	CLAMP	1	1	1			

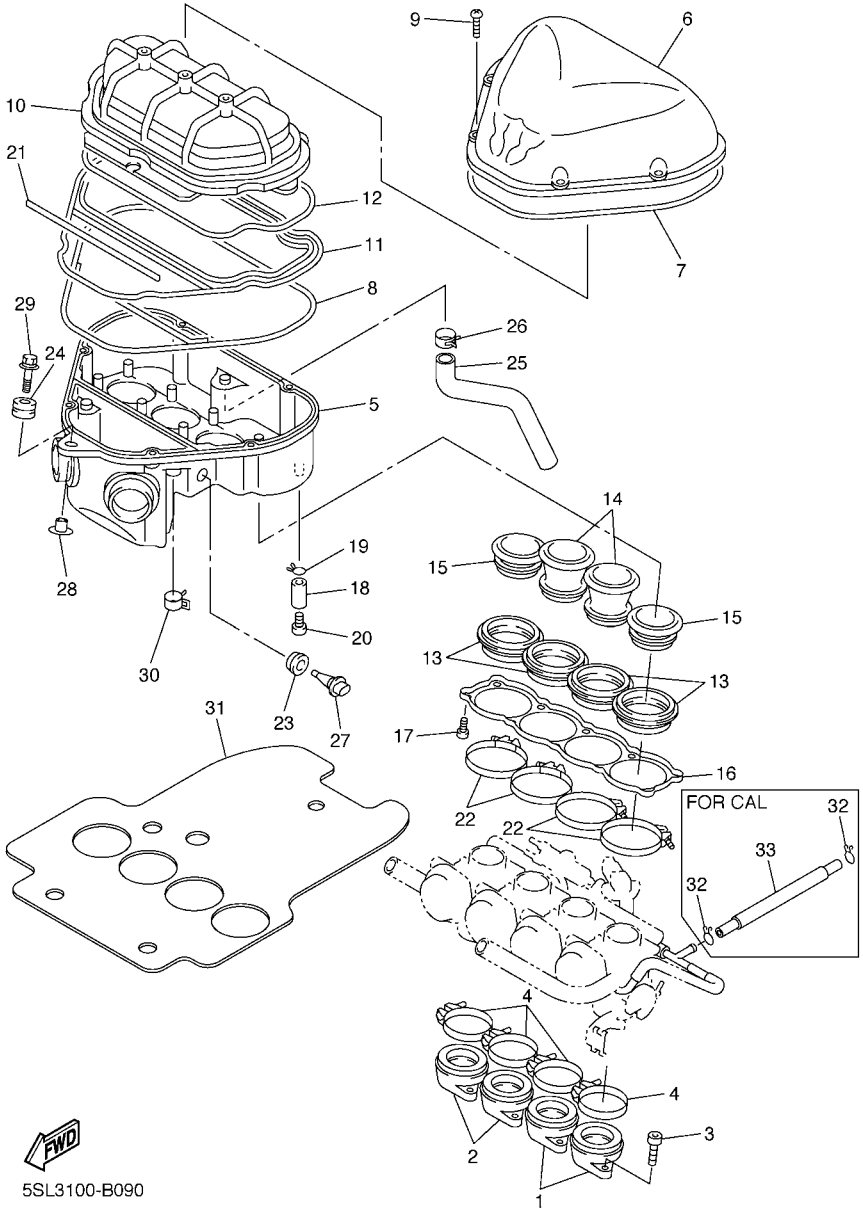

FIG. 9 INTAKE

REF. NO.	PART NO.	DESCRIPTION	5SL3	5SL4	5SL5			REMARKS
1	5SL–13586–00	JOINT, CARBURETOR 1	2	2	2			
2	5SL–13596–00	JOINT, CARBURETOR 2	2	2	2			
3	91317–06020	BOLT	8	8	8			
4	90450–63001	HOSE CLAMP ASSY	4	4	4			
5	5SL–14411–00	CASE, AIR CLEANER 1	1	1	1			
6	5SL–14421–00	CASE, AIR CLEANER 2	1	1	1			
7	5EB–14452–00	SEAL	1	1	1			
8	5EB–14462–00	SEAL	1	1	1			
9	98507–05025	SCREW, PAN HEAD	6	6	6			
10	5SL–14450–00	ELEMENT ASSY, AIR CLEANER	1	1	1			
11	5EB–1441F–01	PARTITION, AIR CLEANER CASE	1	1	1			
12	5EB–14457–00	SEAL	1	1	1			
13	5SL–14453–00	JOINT, AIR CLEANER 1	4	4	4			
14	5SL–14469–00	FUNNEL, AIR	2	2	2			
15	5SL–14479–00	FUNNEL	2	2	2			
16	5SL–14477–00	PLATE	1	1	1			
17	97707–50120	SCREW, TAPPING	10	10	10			
18	90445–11795	HOSE (L30)	1	1	1			
19	90467–10041	CLIP	1	1	1			
20	90338–08174	PLUG	1	1	1			
21	5EB–14467–00	SEAL	1	1	1			
22	90450–53002	HOSE CLAMP ASSY	4	4	4			
23	5CA–14435–00	GROMMET	1	1	1			
24	90480–12314	GROMMET	1	1	1			
25	5SL–15373–00	PIPE, BREATHER	1	1	1			
26	90467–15054	CLIP	1	1	1			
27	5CA–85886–00	SENSOR, AIR TEMPRATURE	1	1	1			

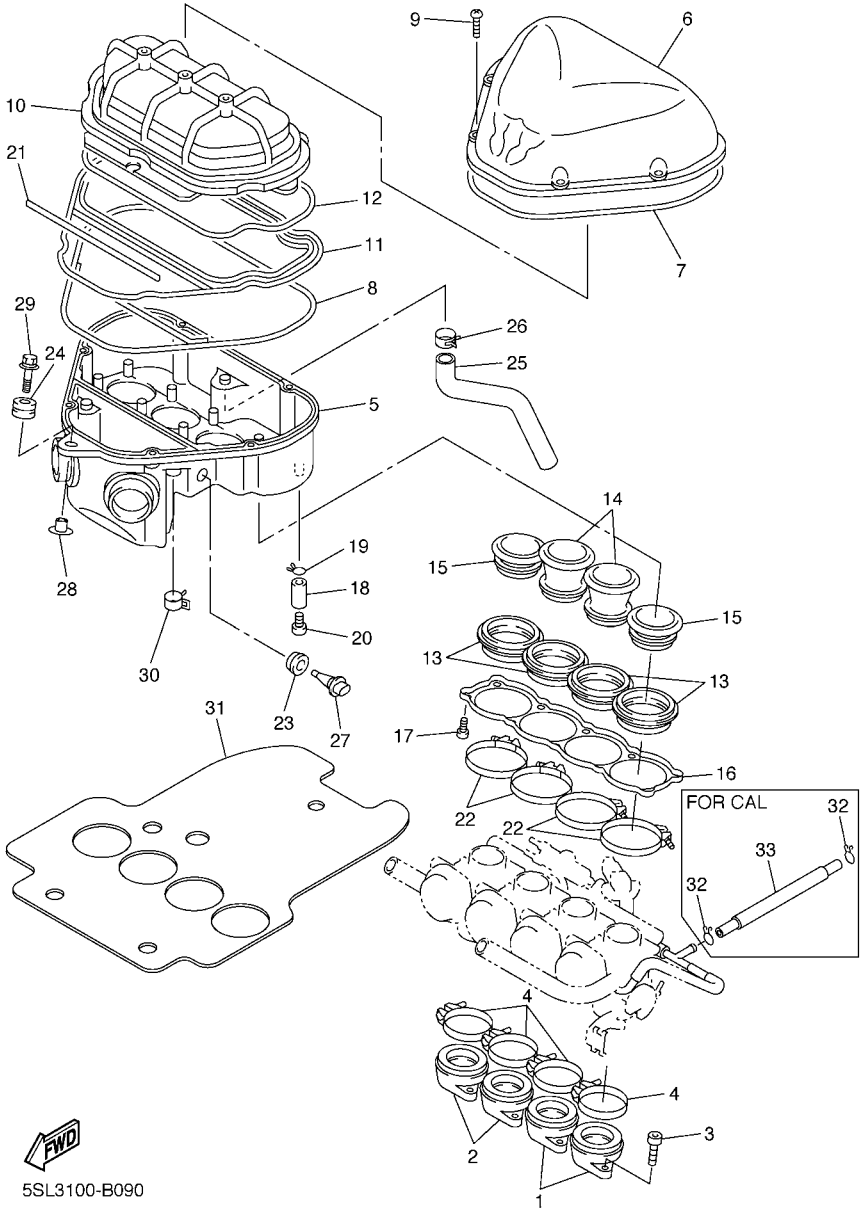

FIG. 9 INTAKE

REF. NO.	PART NO.	DESCRIPTION	5SL3	5SL4	5SL5			REMARKS
28	90387–065J6	COLLAR	1	1	1			
29	90119–06172	BOLT, WITH WASHER	1	1	1			
30	90467–17128	CLIP	2	2	2			
31	5SL–12682–00	PROTECTOR, HEAT	1	1	1			
32	90467–10008	CLIP		2				
33	5SL–1443J–00	PIPE		1				

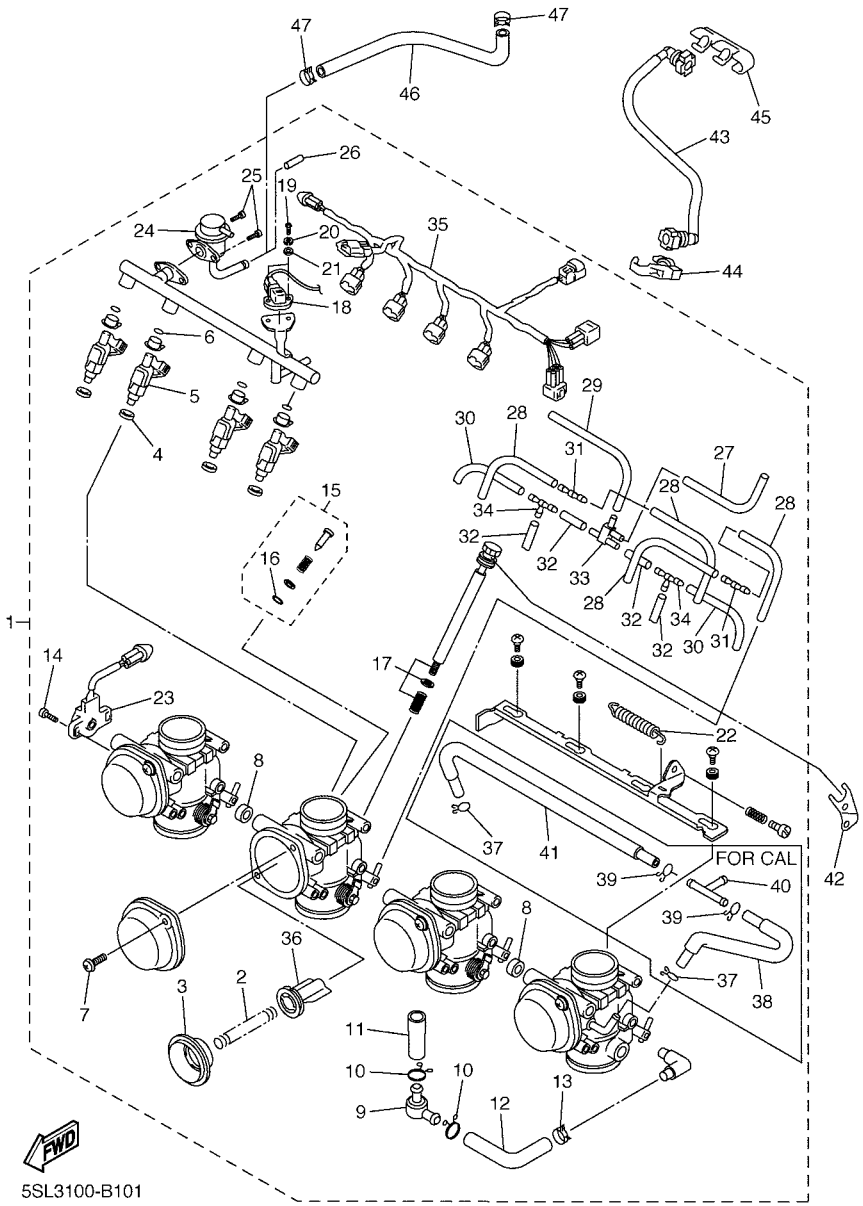

FIG. 10 INTAKE 2

REF. NO.	PART NO.	DESCRIPTION	5SL3	5SL4	5SL5			REMARKS
1	5SL–13750–00	THROTTLE BODY ASSY	1		1			
	5SL–13750–10	THROTTLE BODY ASSY		1				
2	4SV–14933–00	.SPRING, DIAPHRAGM	4	4	4			
3	5SL–24411–00	.DIAPHRAGM	4	4	4			
4	90430–09002	.GASKET	4	4	4			
5	5SL–13761–00	.INJECTOR ASSY	4	4	4			
6	5FL–14147–00	.O-RING	4	4	4			
7	4KM–14216–00	.SCREW	8	8	8			
8	5SL–14987–00	.HOSE	2	2	2			
9	3LN–24515–00	.NET, FILTER 2	2	2	2			
10	90467–15012	.CLIP	4	4	4			
11	5SL–14148–00	.PIPE	2	2	2			
12	5SL–14348–00	.PIPE 1	2	2	2			
13	90467–15001	.CLIP	2	2	2			
14	8CC–14216–10	.SCREW	2	2	2			
15	5JW–14104–00	.AIR SCREW SET	4	4	4			
16	3H1–14147–00	..O-RING	1	1	1			
17	5SL–14103–00	.THROTTLE SCREW SET	1	1	1			
18	5JW–82380–00	.SENSOR, PRESSURE	1	1	1			
19	98506–05016	.SCREW, PAN HEAD	2	2	2			
20	92906–05100	.WASHER, SPRING	2	2	2			
21	92906–05600	.WASHER, PLATE	2	2	2			
22	5JW–14589–00	.SPRING	1	1	1			
23	5SL–85885–00	.THROTTLE SENSOR ASSY	1	1	1			
24	5SL–13906–00	.REGULATOR, PRESSURE	1	1	1			
25	98507–05008	.SCREW, PAN HEAD	2	2	2			
26	5JW–14118–00	.CAP	1	1	1			

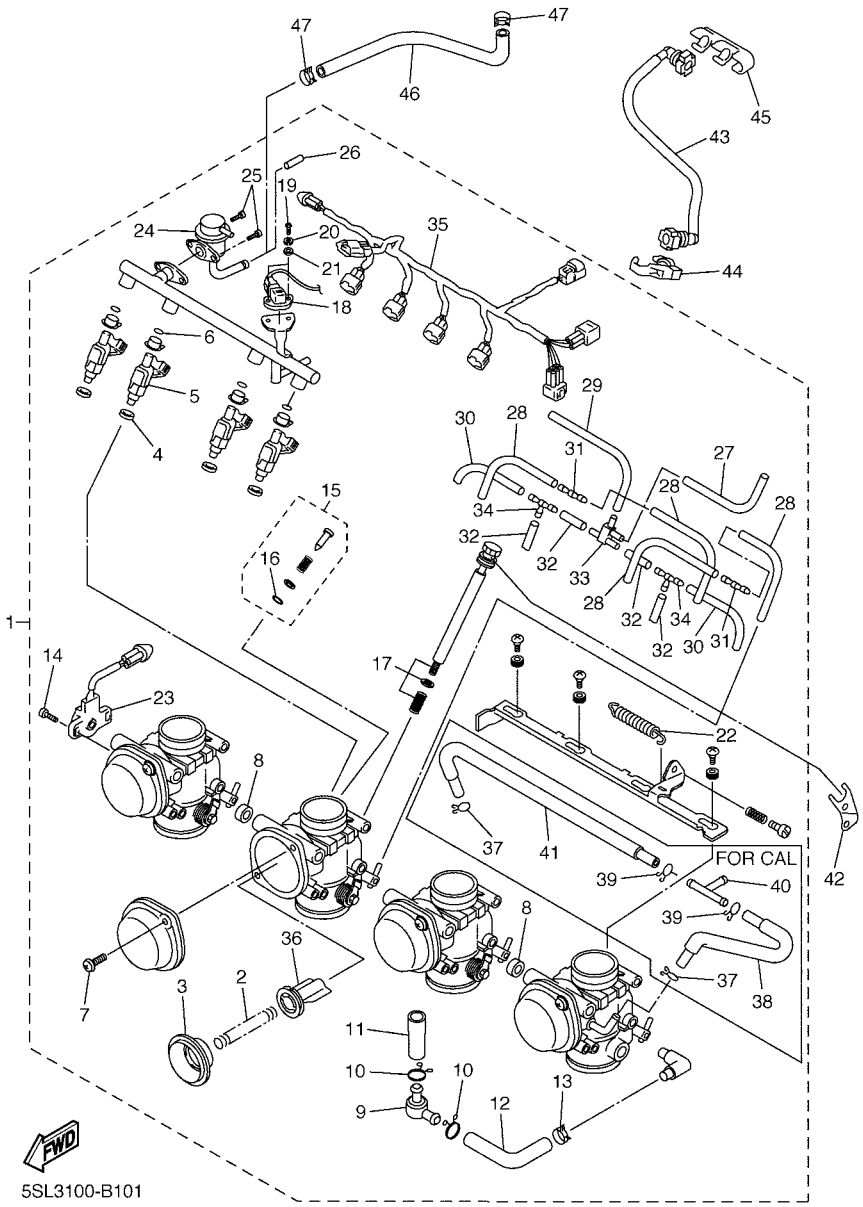

FIG. 10 INTAKE 2

REF. NO.	PART NO.	DESCRIPTION	5SL3	5SL4	5SL5			REMARKS
27	5SL–14349–00	.PIPE	1	1	1			
28	5PW–14396–00	.PIPE	4	4	4			
29	5PW–14349–00	.PIPE	1	1	1			
30	68V–13533–00	.HOSE, VACUUM SENSING 4	2	2	2			
31	5PW–14251–00	.NIPPLE	2	2	2			
32	5FL–14348–10	.PIPE 1	4	4	4			
33	5PW–1410F–00	.CONNECTOR	1	1	1			
34	68V–24376–00	.PIPE, JOINT 1	2	2	2			
35	5SL–82386–00	.EXTENSION, WIRE HARNESS	1	1	1			
36	5PW–14112–00	.VALVE, THROTTLE 1	4	4	4			
37	4LE–14137–00	.CLIP		2				
38	5SL–14465–00	.PIPE		1				
39	90467–10008	.CLIP		2				
40	90413–08012	.WAY 3		1				
41	5SL–14466–00	.PIPE		1				
42	5SL–14413–00	STAY	1	1	1			
43	5SL–13971–00	PIPE, FUEL 1	1	1	1			
44	90464–16005	CLAMP	1	1	1			
45	90464–16005	CLAMP	1	1	1			
46	5SL–13972–00	PIPE, FUEL 2	1	1	1			
47	90467–12003	CLIP	2	2	2			

FIG. 11 AIR INDUCTION SYSTEM

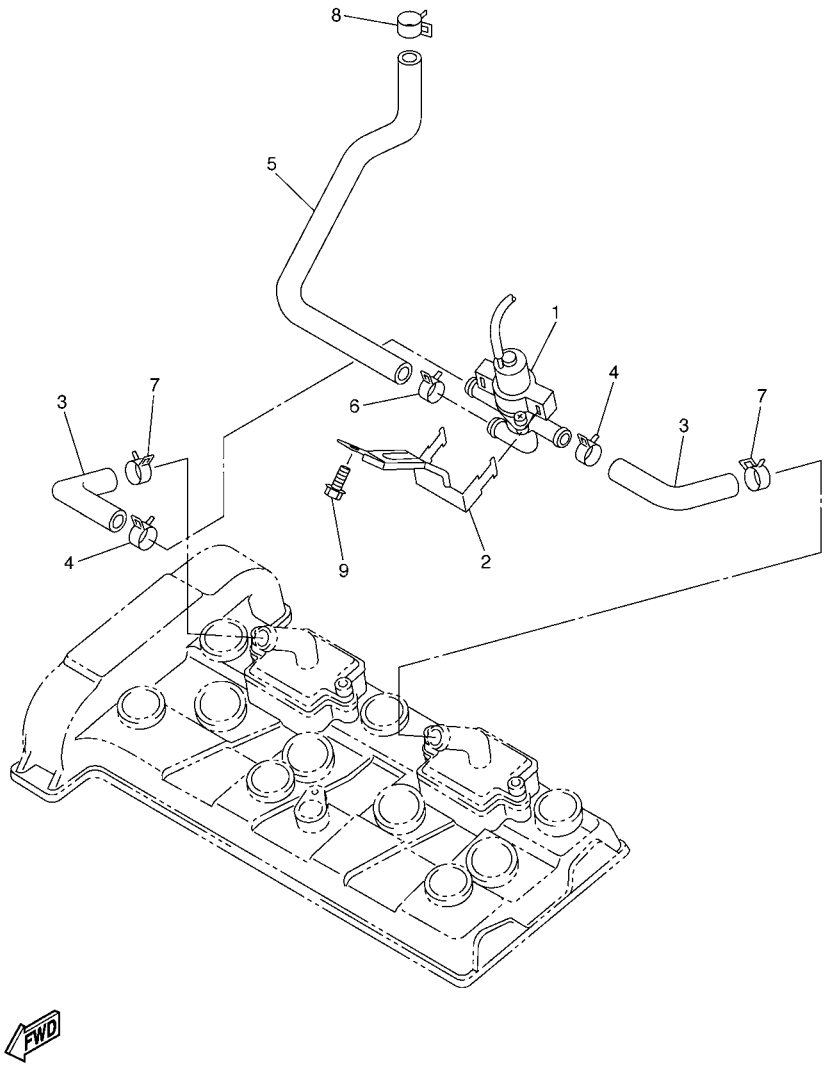

REF. NO.	PART NO.	DESCRIPTION	5SL3	5SL4	5SL5			REMARKS
1	5SL–14840–00	AIR CUT VALVE ASS'Y	1	1	1			
2	5SL–14834–00	STAY	1	1	1			
3	5SL–14881–00	HOSE, BEND 1	2	2	2			
4	90467–18172	CLIP	2	2	2			
5	5SL–14882–00	HOSE, BEND 2	1	1	1			
6	90467–18172	CLIP	1	1	1			
7	90467–180A0	CLIP	2	2	2			
8	90467–17128	CLIP	1	1	1			
9	90105–06020	BOLT, FLANGE	1	1	1			

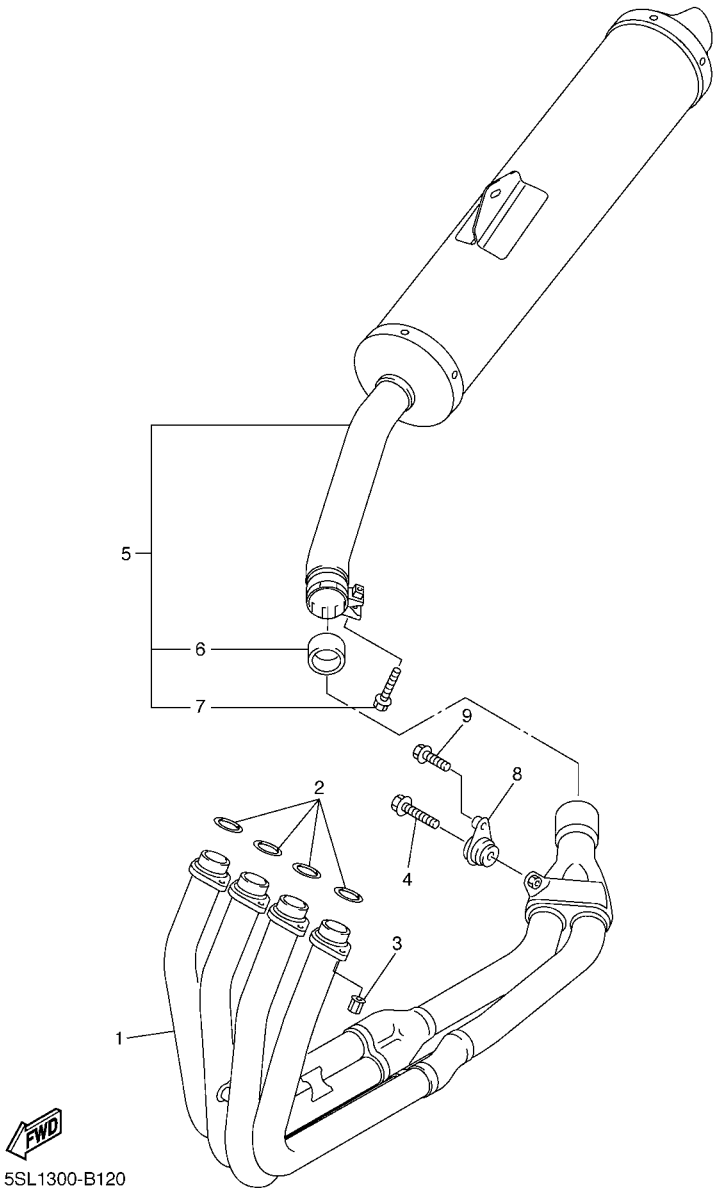

FIG. 12 EXHAUST

REF. NO.	PART NO.	DESCRIPTION	5SL3	5SL4	5SL5			REMARKS
1	5SL–14602–00	EXHAUST PIPE COMP.	1	1	1			
2	3YF–14613–01	GASKET, EXHAUST PIPE	4	4	4			
3	90179–08410	NUT	8	8	8			
4	95024–08035	BOLT, FLANGE	1	1	1			
5	5SL–14710–10	MUFFLER ASSY 1	1	1	1			
6	5SL–14714–00	.GASKET, MUFFLER	1	1	1			
7	95814–08045	.BOLT, FLANGE	1	1	1			
8	5SL–21446–10	STAY, MUFFLER 2	1	1	1			
9	90105–08054	BOLT, FLANGE	1	1	1			

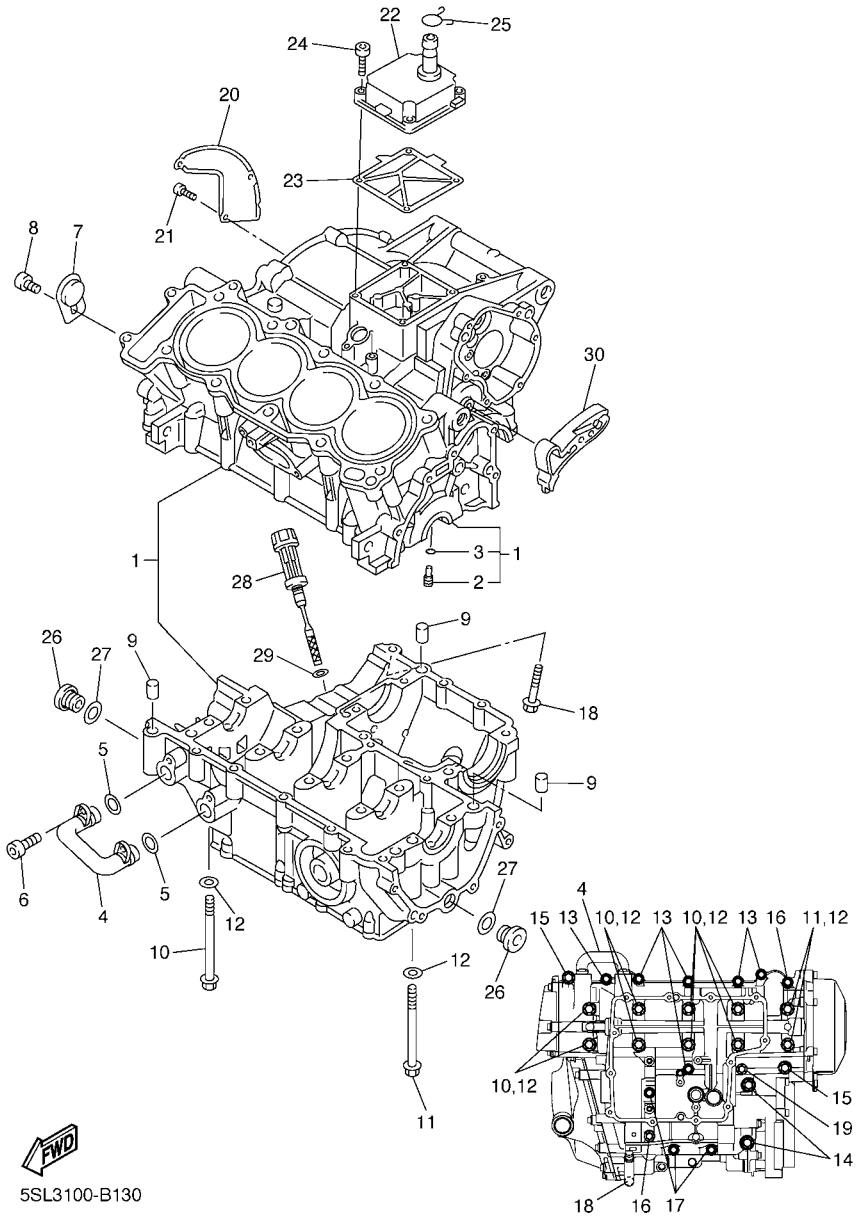

FIG. 13 CRANKCASE

REF. NO.	PART NO.	DESCRIPTION	5SL3	5SL4	5SL5			REMARKS
1	5SL–15100–01	CRANKCASE ASSY	1	1	1			
2	5EB–15155–00	.NOZZLE 3	4	4	4			
3	93210–04092	.O-RING	4	4	4			
4	5EB–13418–00	PIPE, OIL 2	1	1	1			
5	93210–14579	O-RING	2	2	2			
6	90110–06091	BOLT, HEXAGON SOCKET HEAD	2	2	2			
7	5SL–15189–00	PLUG	1	1	1			
8	90149–06020	SCREW	1	1	1			
9	99530–10014	PIN, DOWEL	3	3	3			
10	90105–087A0	BOLT, FLANGE	8	8	8			
11	90105–086A9	BOLT, FLANGE	2	2	2			
12	90201–087K3	WASHER, PLATE	10	10	10			
13	95817–06055	BOLT, FLANGE	6	6	6			
14	95817–08065	BOLT, FLANGE	2	2	2			
15	90109–065G3	BOLT	2	2	2			
16	95817–06065	BOLT, FLANGE	2	2	2			
17	95817–06045	BOLT, FLANGE	3	3	3			
18	95817–06100	BOLT, FLANGE	1	1	1			
19	90105–06006	BOLT, FLANGE	1	1	1			
20	5SL–11165–00	PLATE, BREATHER	1	1	1			
21	90149–06020	SCREW	3	3	3			
22	5SL–15413–00	COVER	1	1	1			
23	5SL–15462–00	GASKET, CRANKCASE COVER 3	1	1	1			
24	91314–06025	BOLT	4	4	4			
25	90467–14015	CLIP	1	1	1			
26	36Y–15189–00	PLUG	2	2	2			
27	93210–16325	O-RING	2	2	2			

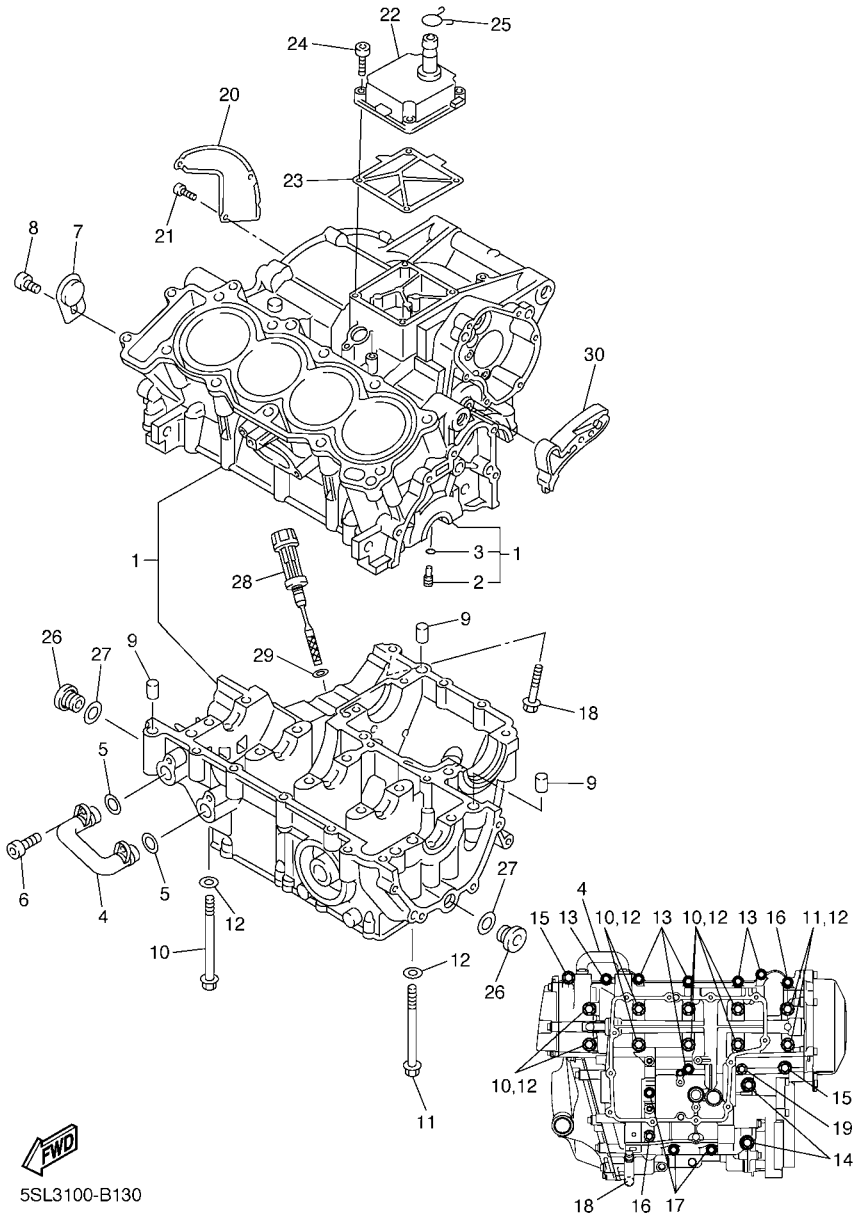

FIG. 13 CRANKCASE

REF. NO.	PART NO.	DESCRIPTION	5SL3	5SL4	5SL5			REMARKS
28	5EB–15362–00	PLUG, OIL LEVEL	1	1	1			
29	93210–09165	O-RING	1	1	1			
30	5SL–15377–00	GUIDE, INLET	1	1	1			

FIG. 14 CRANKCASE COVER 1

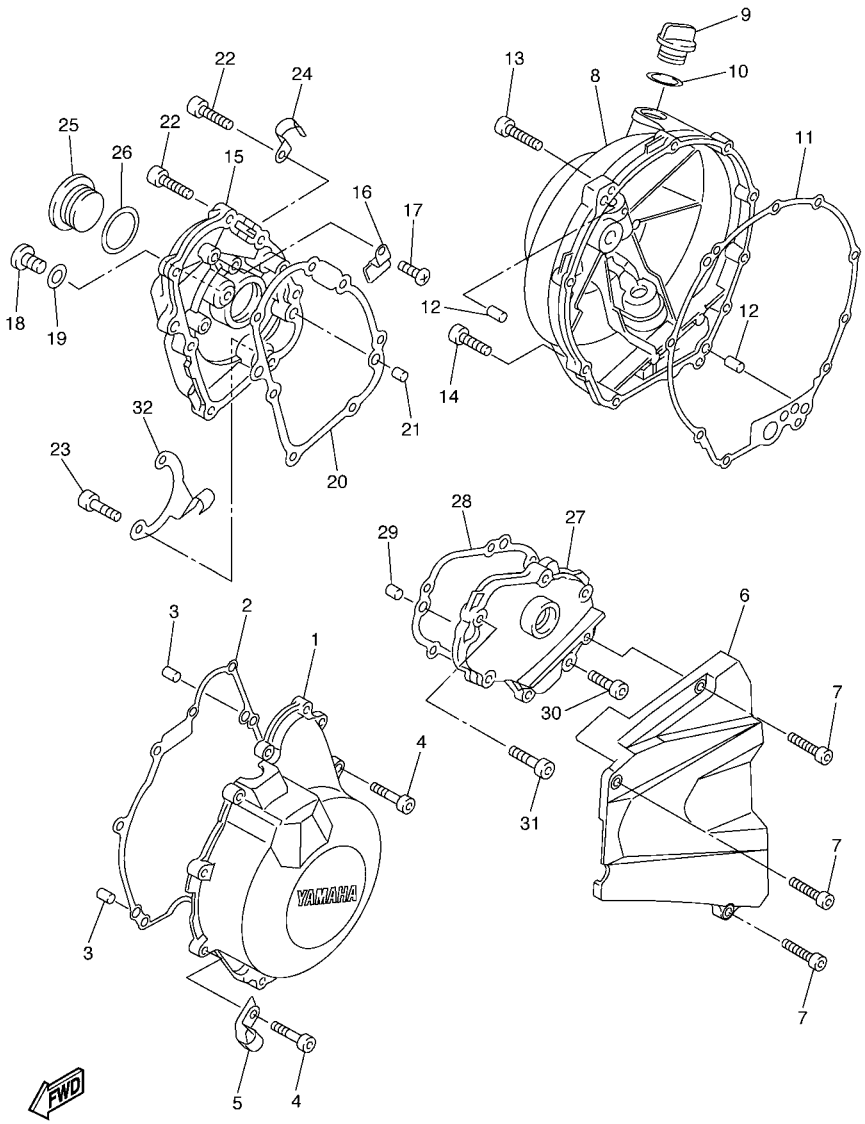

REF. NO.	PART NO.	DESCRIPTION	5SL3	5SL4	5SL5			REMARKS
1	5SL–15411–00	COVER, CRANKCASE 1	1	1	1			
2	5SL–15451–00	GASKET, CRANKCASE COVER 1	1	1	1			
3	99530–08012	PIN, DOWEL	2	2	2			
4	91314–06025	BOLT	9	9	9			
5	90461–10006	CLAMP	1	1	1			
6	5SL–15418–00	COVER, CHAIN CASE	1	1	1			
7	91314–06025	BOLT	3	3	3			
8	5SL–15421–00	COVER, CRANKCASE 2	1	1	1			
9	3F9–15362–00	PLUG, OIL LEVEL	1	1	1			
10	93210–27194	O-RING	1	1	1			
11	5SL–15461–00	GASKET, CRANKCASE COVER 2	1	1	1			
12	93608–17263	PIN, DOWEL	2	2	2			
13	90109–06031	BOLT	9	9	9			
14	90110–06071	BOLT, HEXAGON SOCKET HEAD	1	1	1			
15	5SL–15416–00	COVER, OIL PUMP	1	1	1			
16	90465–14011	CLAMP	1	1	1			
17	98507–06012	SCREW, PAN HEAD	1	1	1			
18	92014–08014	BOLT, BUTTON HEAD	1	1	1			
19	90430–08143	GASKET	1	1	1			
20	5SL–15456–00	GASKET, OIL PUMP COVER 1	1	1	1			
21	99530–08012	PIN, DOWEL	2	2	2			
22	90109–06014	BOLT	5	5	5			
23	90109–06015	BOLT	2	2	2			
24	90465–08395	CLAMP	1	1	1			
25	90340–32004	PLUG, STRAIGHT SCREW	1	1	1			
26	93210–32172	O-RING	1	1	1			
27	5SL–15425–00	COVER, GENERATOR 2	1	1	1			

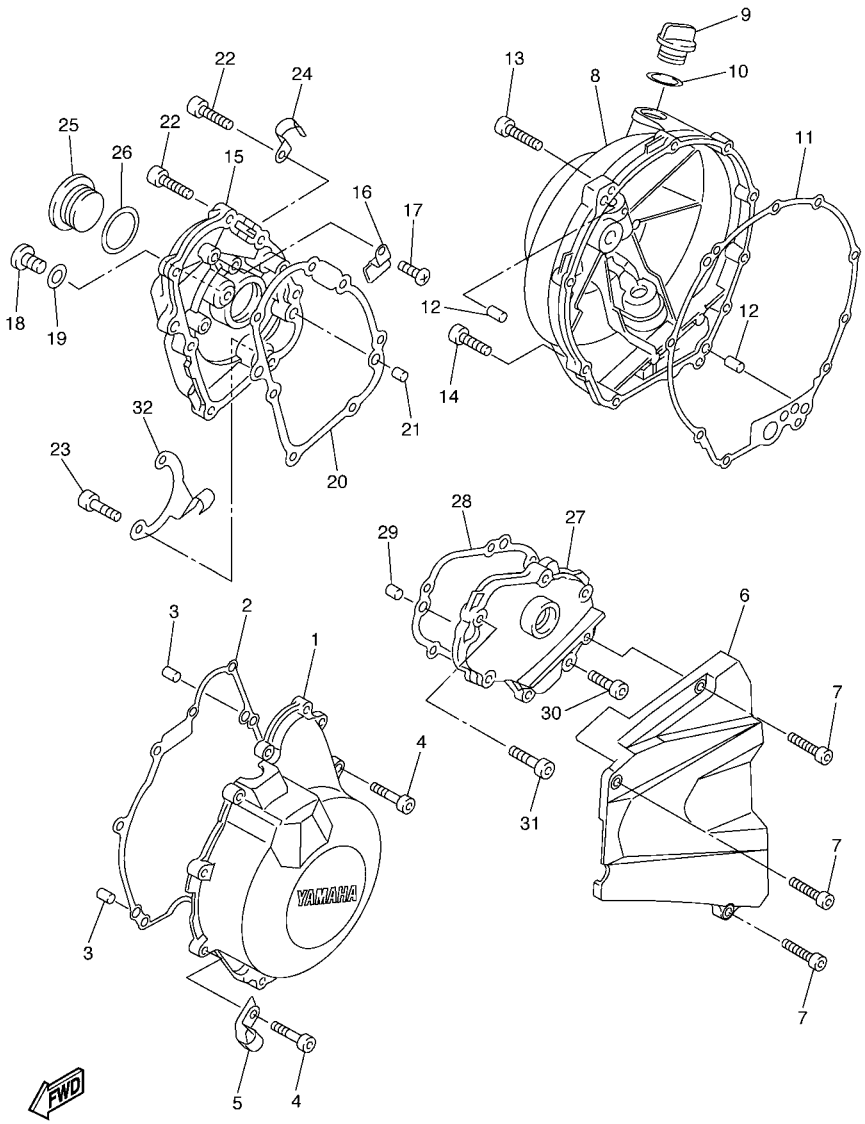

5SL1300-B140

FIG. 14 CRANKCASE COVER 1

REF. NO.	PART NO.	DESCRIPTION	5SL3	5SL4	5SL5			REMARKS
28	5SL–15463–00	GASKET, CARBURETOR COVER 2	1	1	1			
29	99530–08012	PIN, DOWEL	2	2	2			
30	90109–06014	BOLT	2	2	2			
31	90109–06015	BOLT	4	4	4			
32	5EB–15441–00	HOLDER, CLUTCH CABLE	1	1	1			

FIG. 15 STARTER

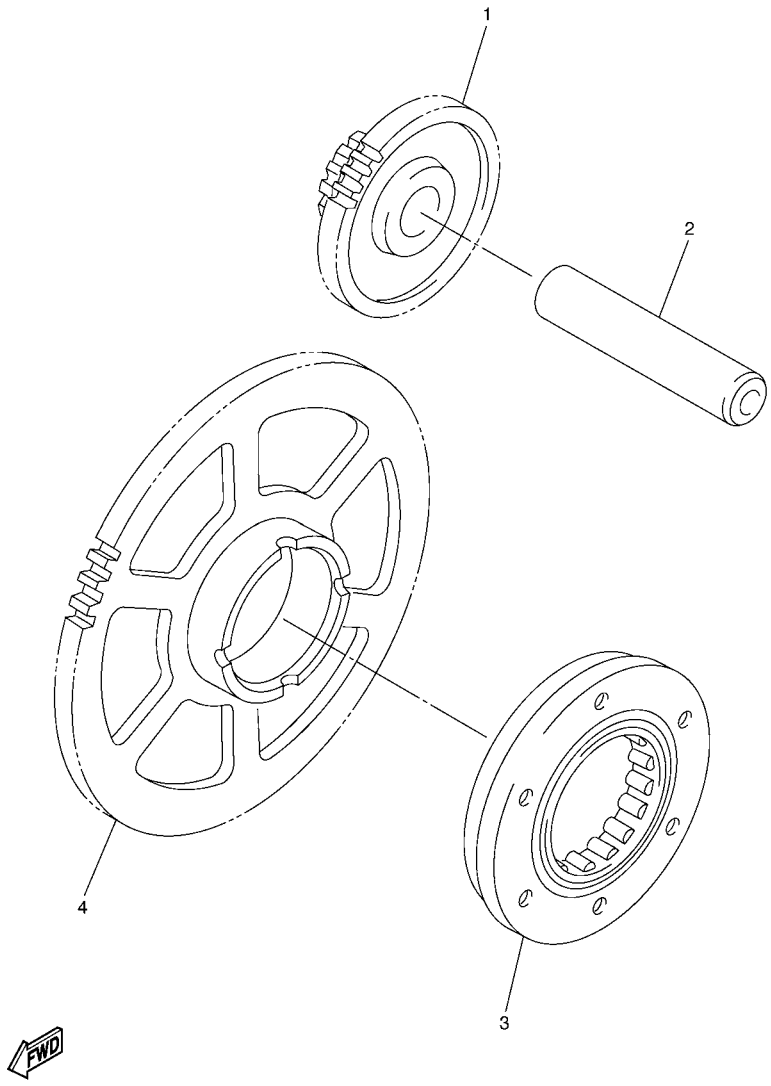

5SL1300-B150

REF. NO.	PART NO.	DESCRIPTION	5SL3	5SL4	5SL5			REMARKS
1	5SL–15512–00	GEAR, IDLER 1	1	1	1			
2	5MT–15521–00	SHAFT 1	1	1	1			
3	5SL–15590–00	STARTER ONE-WAY ASSY	1	1	1			
4	5MT–15515–00	GEAR 3	1	1	1			

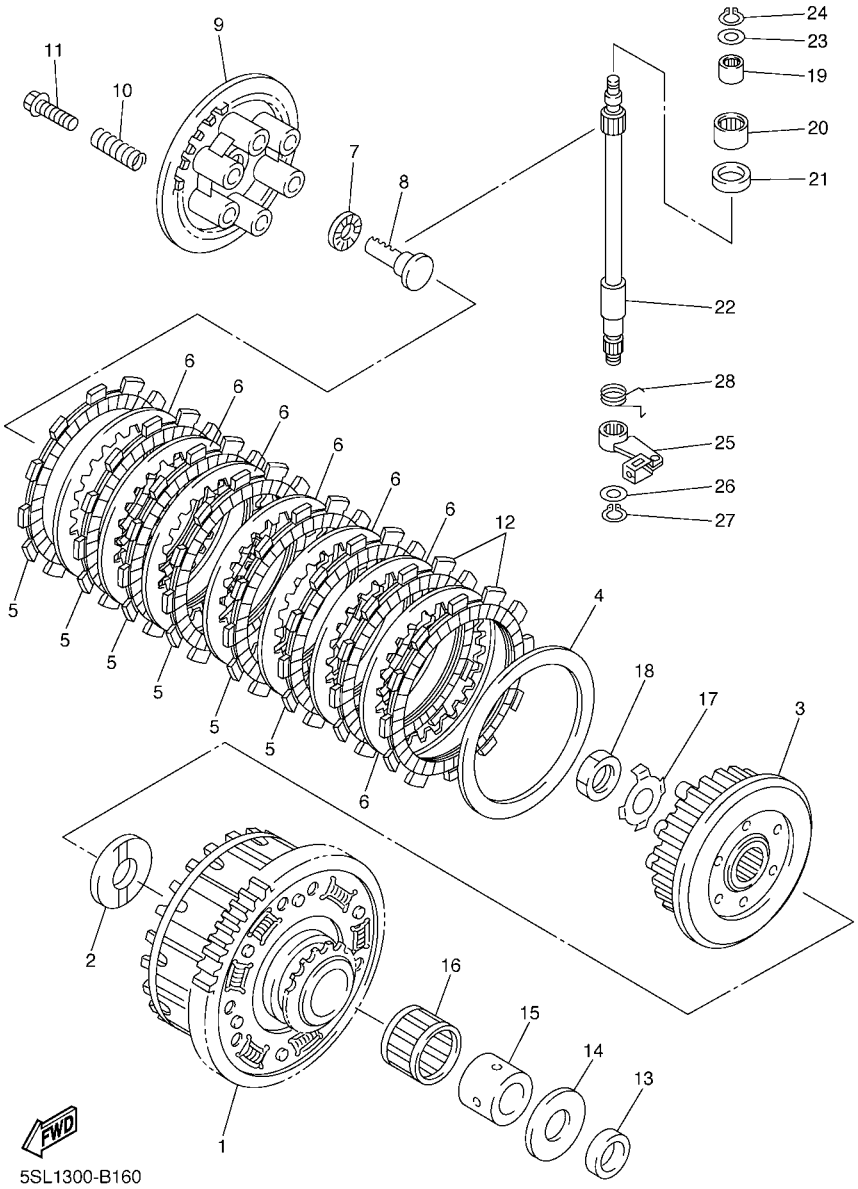

FIG. 16 CLUTCH

REF. NO.	PART NO.	DESCRIPTION	5SL3	5SL4	5SL5			REMARKS
1	5SL–16150–00	PRIMARY DRIVEN GEAR COMP.	1	1	1			
2	5EB–16154–00	PLATE, THRUST 1	1	1	1			
3	5SL–16371–00	BOSS, CLUTCH	1	1	1			
4	168–16324–00	PLATE, CLUTCH 1 (T=2.3)	1	1	1			
5	4FN–16321–00	PLATE, FRICTION	6	6	6			
6	3J2–16324–00	PLATE, CLUTCH 1 (T=2.0)	7	7	7			
7	93306–00304	BEARING (B6003C4)	1	1	1			
8	5EB–16356–01	ROD, PUSH 1	1	1	1			
9	5EB–16351–01	PLATE, PRESSURE 1	1	1	1			
10	90501–237L0	SPRING, COMPRESSION	6	6	6			
11	90159–06002	SCREW, WITH WASHER	6	6	6			
12	5SL–16321–00	PLATE, FRICTION	2	2	2			
13	90201–255A6	WASHER, PLATE	1	1	1			
14	1AE–16164–00	PLATE, THRUST 2	1	1	1			
15	90560–25270	SPACER	1	1	1			
16	93310–340N8	BEARING	1	1	1			
17	90215–20004	WASHER, LOCK	1	1	1			
18	90170–20008	NUT	1	1	1			
19	93317–11020	BEARING	1	1	1			
20	93315–31502	BEARING	1	1	1			
21	93102–15212	OIL SEAL	1	1	1			
22	5EB–16382–00	AXLE, PUSH LEVER	1	1	1			
23	92907–08600	WASHER, PLATE	1	1	1			
24	99001–07600	CIRCLIP	1	1	1			
25	5SL–16340–00	PUSH LEVER ASSY	1	1	1			
26	90201–10614	WASHER, PLATE	1	1	1			
27	99001–09600	CIRCLIP	1	1	1			

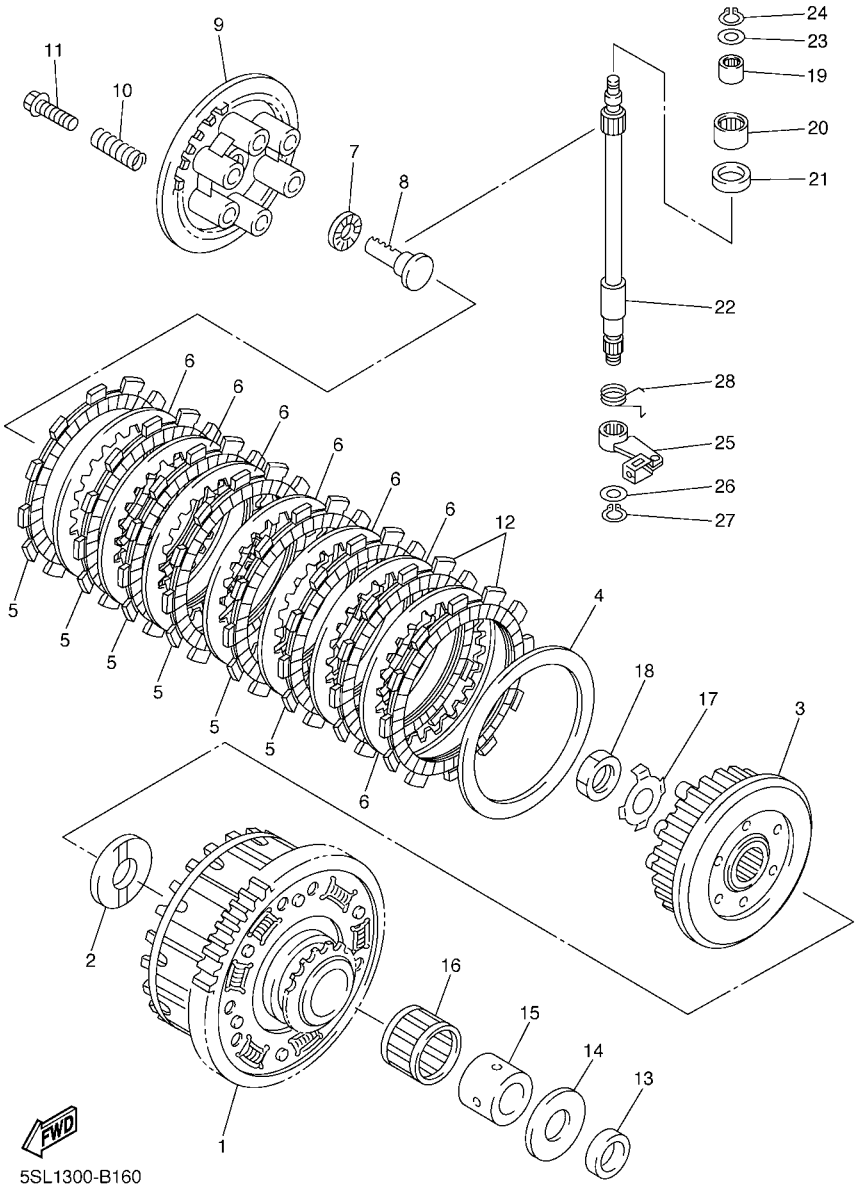

FIG. 16 CLUTCH

REF. NO.	PART NO.	DESCRIPTION	5SL3	5SL4	5SL5			REMARKS
28	90508–165B1	SPRING, TORSION	1	1	1			

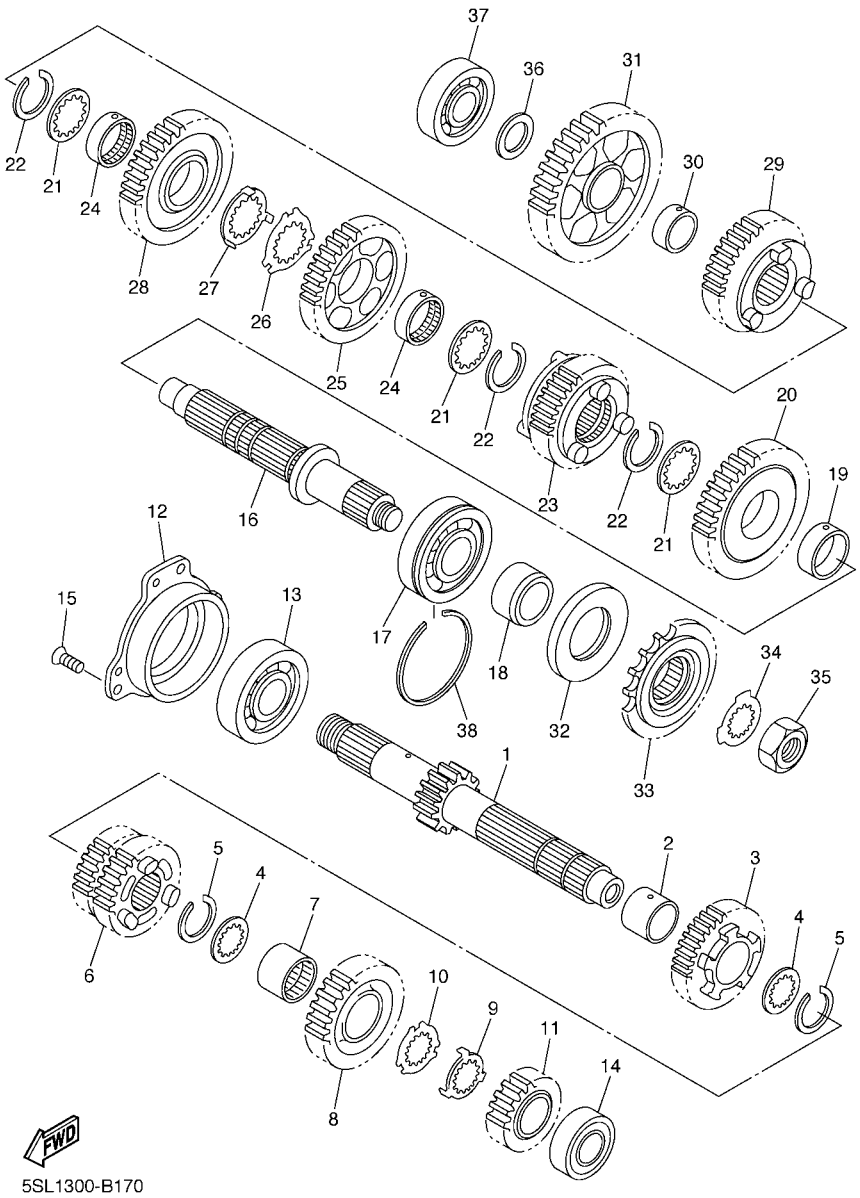

5SL1300-B170

FIG. 17 TRANSMISSION

REF. NO.	PART NO.	DESCRIPTION	5SL3	5SL4	5SL5			REMARKS
1	5SL–17411–00	AXLE, MAIN (13T)	1	1	1			
2	90387–253M6	COLLAR	1	1	1			
3	5SL–17151–20	GEAR, 5TH PINION (21T)	1	1	1			
4	90209–21332	WASHER	2	2	2			
5	93440–25185	CIRCLIP	2	2	2			
6	5SL–17131–20	GEAR, 3RD PINION (18T/24T)	1	1	1			
7	90387–2513E	COLLAR	1	1	1			
8	5SL–17161–00	GEAR, 6TH PINION (24T)	1	1	1			
9	90209–22352	WASHER	1	1	1			
10	90209–21351	WASHER	1	1	1			
11	5SL–17121–00	GEAR, 2ND PINION (19T)	1	1	1			
12	5EB–15163–01	HOUSING, BEARING 1	1	1	1			
13	93306–30525	BEARING (B6305)	1	1	1			
14	93306–20464	BEARING	1	1	1			
15	90151–06008	SCREW, COUNTERSUNK	3	3	3			
16	5SL–17421–00	AXLE, DRIVE	1	1	1			
17	93306–30546	BEARING (B6305A5 SPECIAL)	1	1	1			
18	90387–2504A	COLLAR	1	1	1			
19	90387–2813C	COLLAR	1	1	1			
20	5SL–17221–10	GEAR, 2ND WHEEL (37T)	1	1	1			
21	90209–25342	WASHER	3	3	3			
22	93440–28062	CIRCLIP	3	3	3			
23	5SL–17261–10	GEAR, 6TH WHEEL (26T)	1	1	1			
24	90387–2813D	COLLAR	2	2	2			
25	5SL–17241–00	GEAR, 4TH WHEEL (32T)	1	1	1			
26	90209–25349	WASHER	1	1	1			
27	90209–25350	WASHER	1	1	1			

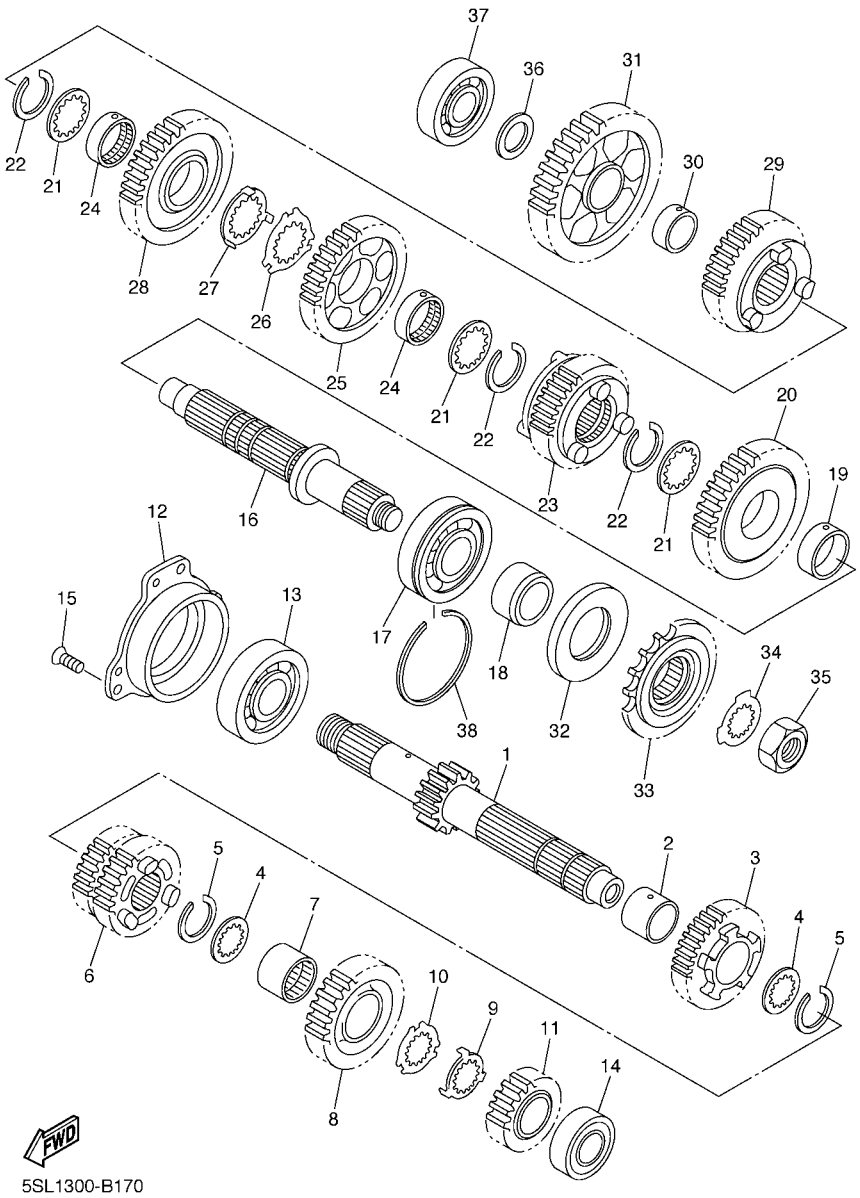

FIG. 17 TRANSMISSION

REF. NO.	PART NO.	DESCRIPTION	5SL3	5SL4	5SL5			REMARKS
28	5SL–17231–00	GEAR, 3RD WHEEL (28T)	1	1	1			
29	5SL–17251–00	GEAR, 5TH WHEEL (25T)	1	1	1			
30	90387–2202V	COLLAR	1	1	1			
31	5SL–17211–00	GEAR, 1ST WHEEL (37T)	1	1	1			
32	93102–35423	OIL SEAL	1	1	1			
33	5SL–17460–00	SPROCKET, DRIVE	1	1	1			
34	90215–21290	WASHER, LOCK	1	1	1			
35	90179–18667	NUT	1	1	1			
36	90201–20278	WASHER, PLATE	1	1	1			
37	93306–20464	BEARING	1	1	1			
38	278–17424–01	CIRCLIP 1	1	1	1			

FIG. 18 SHIFT CAM & FORK

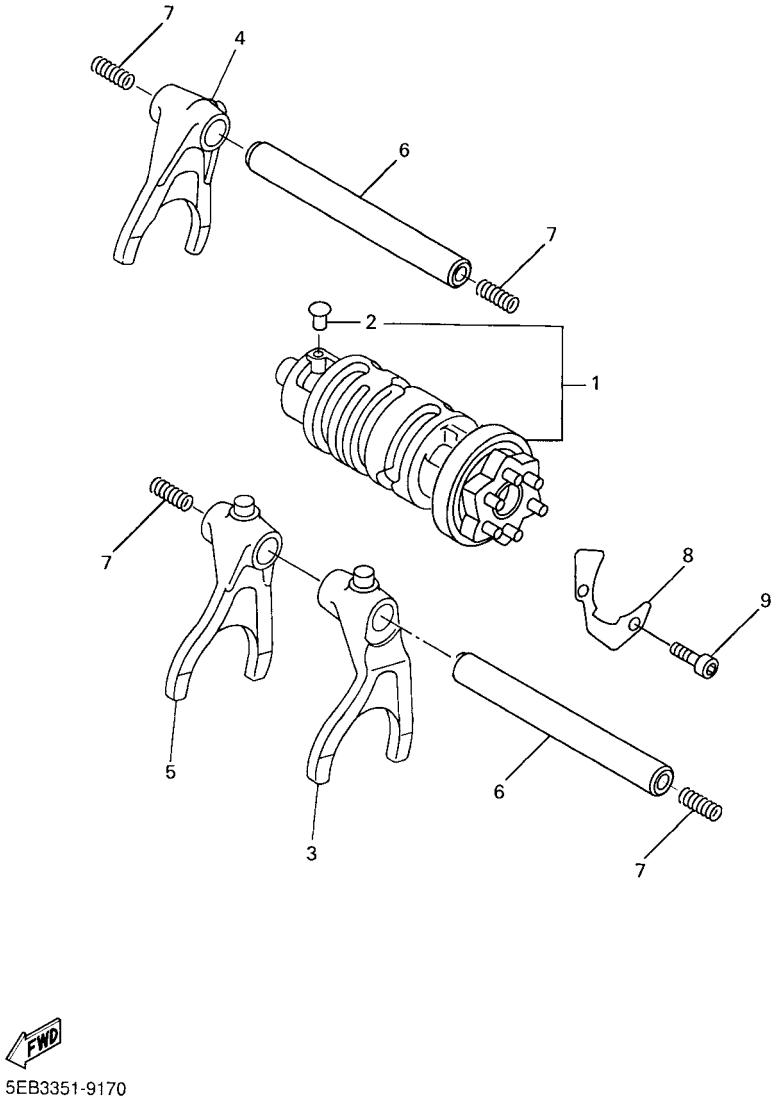

REF. NO.	PART NO.	DESCRIPTION	5SL3	5SL4	5SL5			REMARKS
1	5SL–18540–00	SHIFT CAM ASSY	1	1	1			
2	136–18542–00	.POINT, NEUTRAL	1	1	1			
3	5SL–18511–00	FORK, SHIFT 1	1	1	1			
4	5MT–18512–00	FORK, SHIFT 2	1	1	1			
5	5EB–18513–00	FORK, SHIFT 3	1	1	1			
6	4XV–18531–00	BAR, SHIFT FORK GUIDE 1	2	2	2			
7	90501–064L1	SPRING, COMPRESSION	4	4	4			
8	5EB–18536–00	STOPPER, SHIFT BAR	1	1	1			
9	90110–06018	BOLT, HEXAGON SOCKET HEAD	2	2	2			

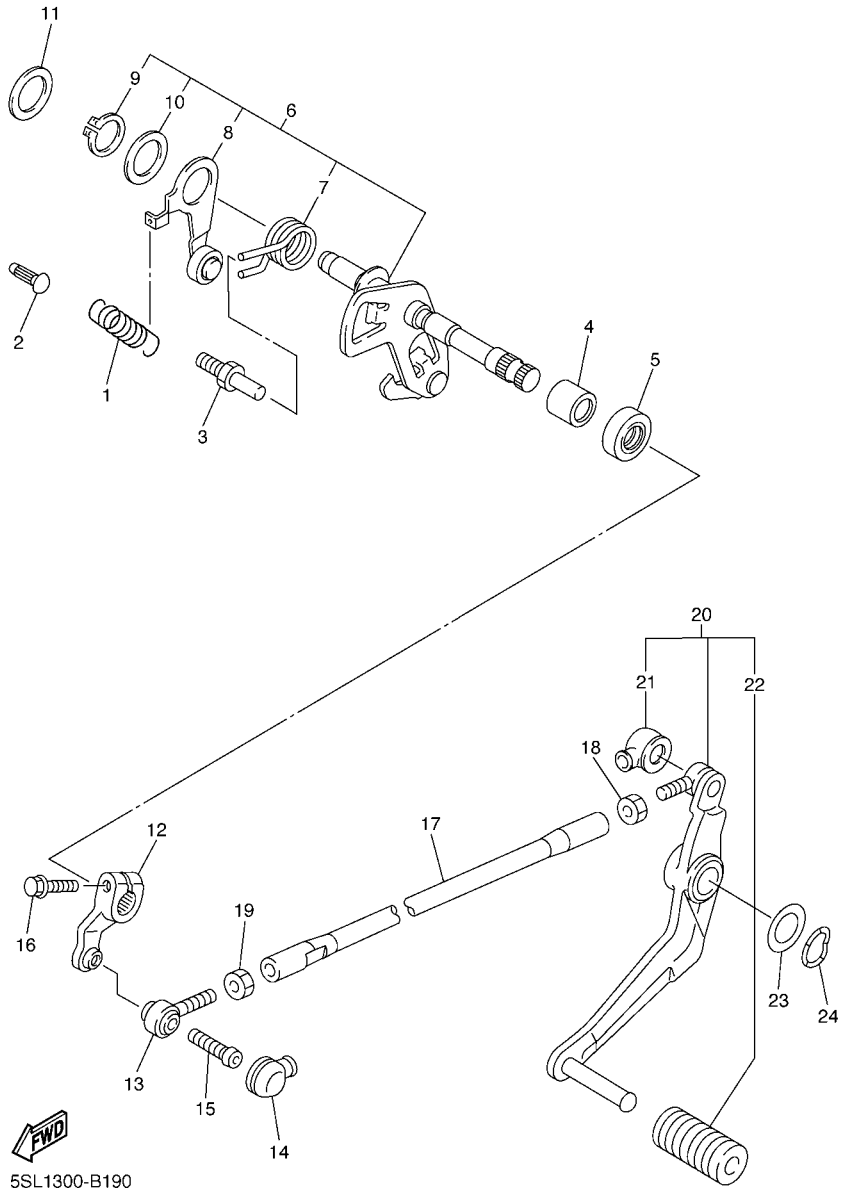

FIG. 19 SHIFT SHAFT

REF. NO.	PART NO.	DESCRIPTION	5SL3	5SL4	5SL5			REMARKS
1	90506–14003	SPRING, TENSION	1	1	1			
2	132–16346–00	HOOK, SPRING	1	1	1			
3	5SL–18127–00	STOPPER, SCREW	1	1	1			
4	93317–11287	BEARING	1	1	1			
5	93101–12004	OIL SEAL	1	1	1			
6	5SL–18101–00	SHIFT SHAFT ASSY	1	1	1			
7	90508–295B2	.SPRING, TORSION	1	1	1			
8	5SL–18140–00	.STOPPER LEVER ASSY	1	1	1			
9	99009–17400	.CIRCLIP	1	1	1			
10	90201–177G4	.WASHER, PLATE	1	1	1			
11	90201–154E8	WASHER, PLATE (T=1.0)	1	1	1			
12	5EB–18112–01	ARM, SHIFT	1	1	1			
13	5LV–18116–00	JOINT, ROD 1	1	1	1			
14	4XV–18154–00	COVER, DUST	1	1	1			
15	90111–06019	BOLT	1	1	1			
16	95824–06020	BOLT, FLANGE	1	1	1			
17	5SL–18115–00	ROD, SHIFT	1	1	1			
18	90170–08358	NUT	1	1	1			
19	95304–06700	NUT	1	1	1			
20	5EB–18110–10	SHIFT PEDAL ASSY	1	1	1			
21	2H9–18154–00	.COVER, DUST	1	1	1			
22	5EB–18113–00	.COVER, SHIFT PEDAL	1	1	1			
23	90201–12013	WASHER, PLATE	1	1	1			
24	90206–12074	WASHER, WAVE	1	1	1			

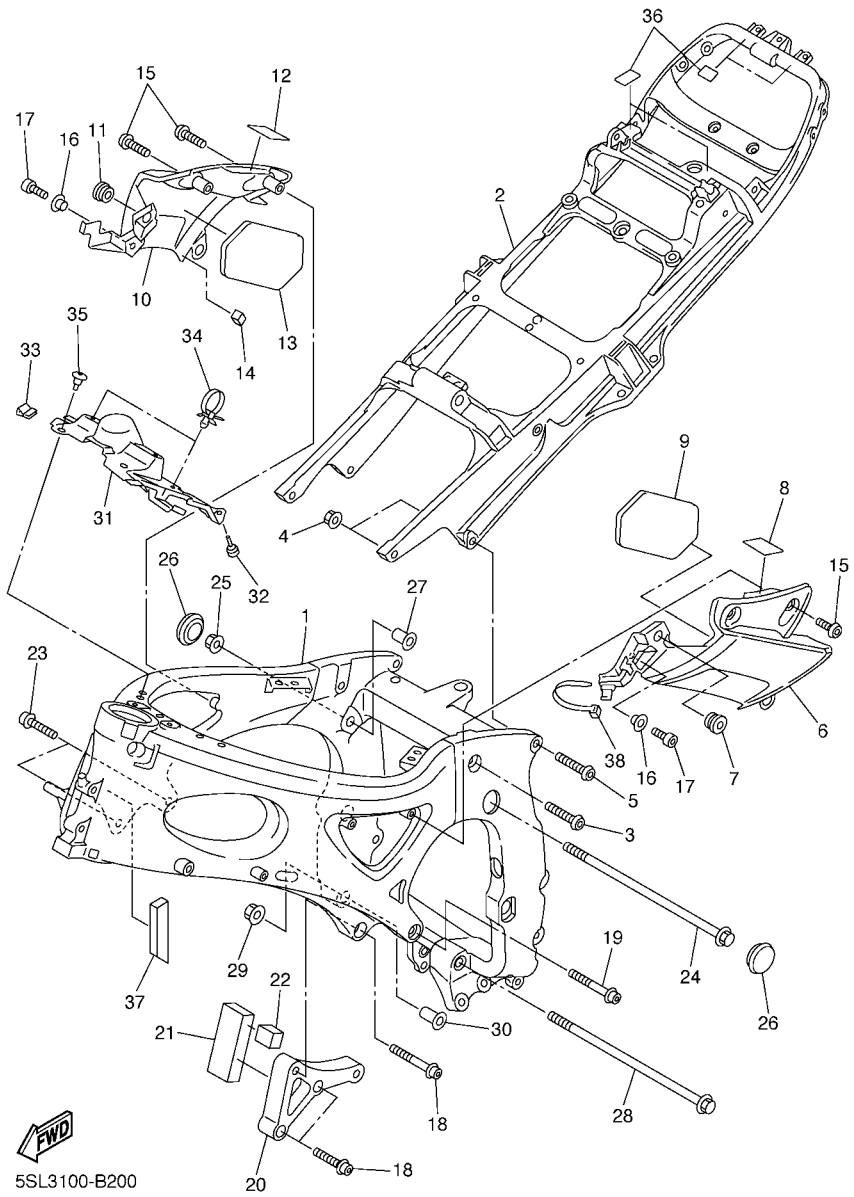

FIG. 20 FRAME

REF. NO.	PART NO.	DESCRIPTION	5SL3	5SL4	5SL5			REMARKS
1	5SL–21110–00	FRAME COMP.	1	1	1			
2	5SL–21190–00	REAR FRAME COMP.	1	1	1			
3	90149–10007	SCREW	2	2	2			
4	90185–10002	NUT, SELF-LOCKING	4	4	4			
5	90149–10006	SCREW	2	2	2			
6	5SL–2117V–00	COVER 7	1	1	1			
7	90480–13398	GROMMET	1	1	1			
8	3KJ–24723–00	DAMPER, SEAT	1	1	1			
9	5SL–28415–00	DAMPER 1	1	1	1			
10	5SL–2117W–00	COVER 8	1	1	1			
11	90480–13398	GROMMET	1	1	1			
12	3KJ–24723–00	DAMPER, SEAT	1	1	1			
13	5SL–28415–00	DAMPER 1	1	1	1			
14	5SL–21649–00	DAMPER	1	1	1			
15	90111–05006	BOLT	4	4	4			
16	90387–050X4	COLLAR	2	2	2			
17	91317–05012	BOLT	2	2	2			
18	90110–10008	BOLT, HEXAGON SOCKET HEAD	3	3	3			
19	90110–10007	BOLT, HEXAGON SOCKET HEAD	1	1	1			
20	5SL–21283–00	SUPPORT, ENGINE	1	1	1			
21	5SL–21488–00	DAMPER	1	1	1			
22	5SL–21486–00	DAMPER 2	1	1	1			
23	90110–10008	BOLT, HEXAGON SOCKET HEAD	2	2	2			
24	90105–10042	BOLT, FLANGE	1	1	1			
25	90179–10696	NUT	1	1	1			
26	90338–27007	PLUG	2	2	2			
27	5EB–21495–00	BOLT, ENGINE ADJUSTING	1	1	1			

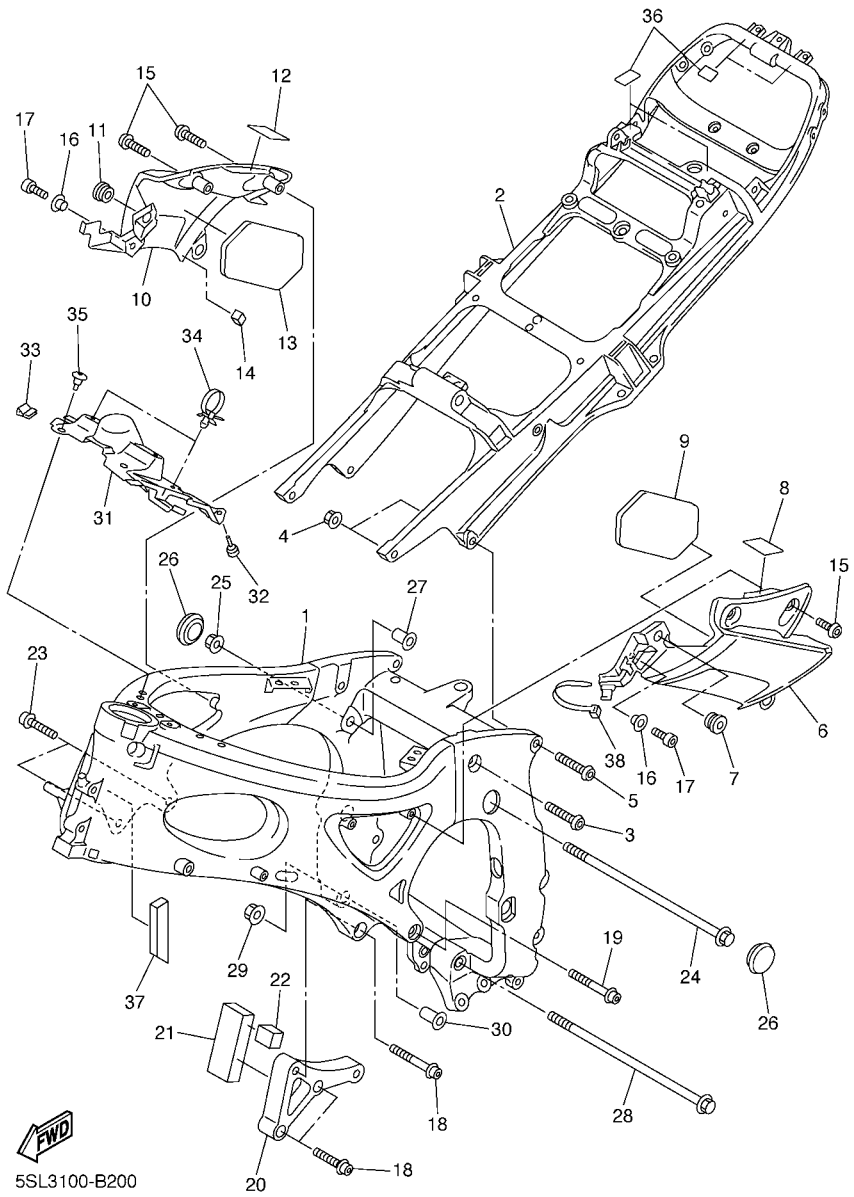

FIG. 20 FRAME

REF. NO.	PART NO.	DESCRIPTION	5SL3	5SL4	5SL5			REMARKS
28	90105–106A2	BOLT, FLANGE	1	1	1			
29	90179–10696	NUT	1	1	1			
30	5EB–21495–00	BOLT, ENGINE ADJUSTING	1	1	1			
31	5SL–2117M–00	COVER 2	1	1	1			
32	36Y–21639–00	DAMPER 2	2	2	2			
33	5SL–21208–00	SEAL SET, 1	1	1	1			
34	90464–12036	CLAMP	2	2	2			
35	90269–07077	RIVET	2	2	2			
36	5SL–21268–00	SEAL	4	4	4			
37	5SL–2139X–00	DAMPER	1	1	1			
38	90464–15195	CLAMP	1	1	1			

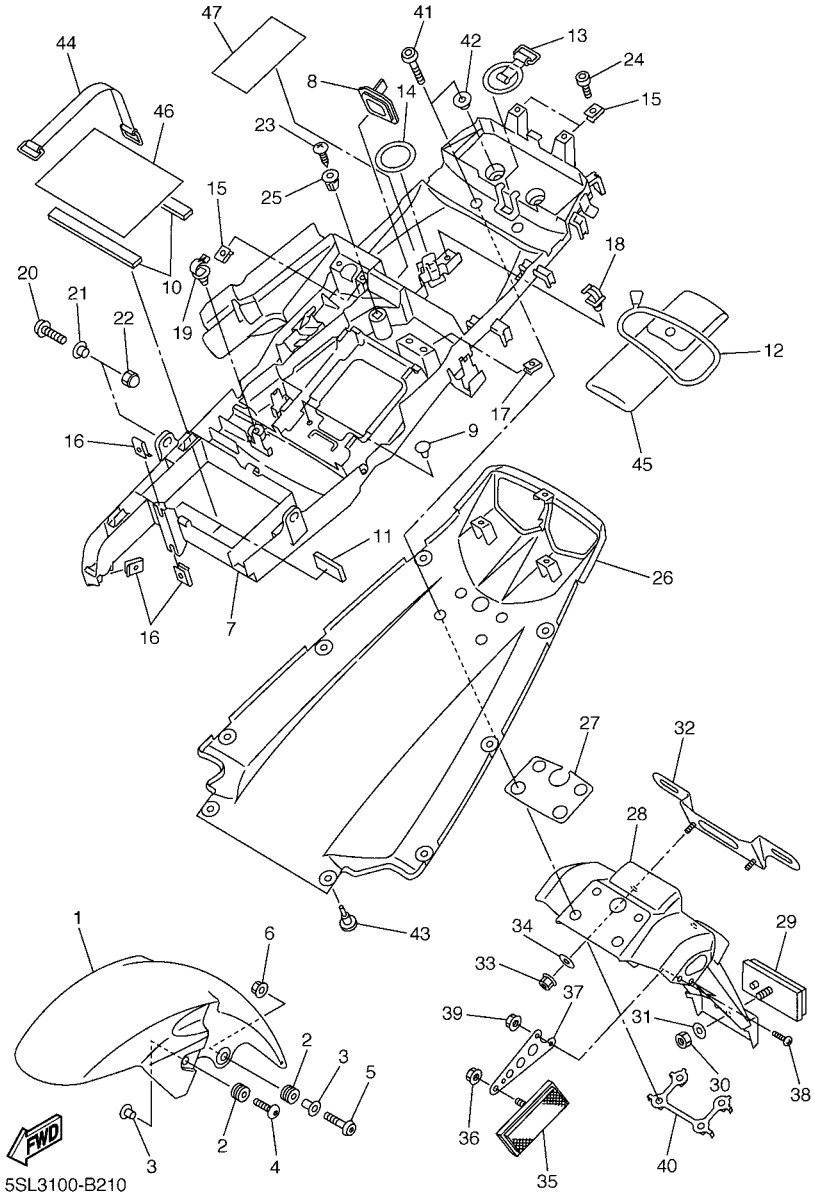

FIG. 21 FENDER

REF. NO.	PART NO.	DESCRIPTION	5SL3	5SL4	5SL5			REMARKS
1	5SL–21511–00–P1	FENDER, FRONT	1	1	1			UR DPBMC
	5SL–21511–00–P2	FENDER, FRONT	1	1	1			UR S3
2	90480–14003	GROMMET	4	4	4			
3	90387–06057	COLLAR	4	4	4			
4	90111–06040	BOLT	2	2	2			
5	92014–06025	BOLT, BUTTON HEAD	2	2	2			
6	95707–06500	NUT, FLANGE	2	2	2			
7	5SL–8212B–00	BOX, BATTERY 1	1	1	1			
8	5MT–2172X–00	COVER, TAILLIGHT	1	1	1			
9	90338–06018	PLUG	2	2	2			
10	1AE–2834E–00	DAMPER 1	2	2	2			
11	3KJ–24723–00	DAMPER, SEAT	5	5	5			
12	3YX–21376–00	BAND, TOOL	1	1	1			
13	5SL–21646–00	BAND	1	1	1			
14	5SL–21647–00	BAND	1	1	1			
15	90183–05076	NUT, SPRING	3	3	3			
16	90183–06053	NUT, SPRING	3	3	3			
17	90183–04039	NUT, SPRING	2	2	2			
18	90464–07259	CLAMP	1	1	1			
19	90464–13249	CLAMP	1	1	1			
20	90111–06007	BOLT	2	2	2			
21	90387–06022	COLLAR	2	2	2			
22	90176–06055	NUT, CROWN	2	2	2			
23	97707–60020	SCREW, TAPPING	1	1	1			
24	91317–05012	BOLT	2	2	2			
25	90338–08226	PLUG	1	1	1			
26	5SL–21611–00–P1	FENDER, REAR	1	1	1			UR DPBMC

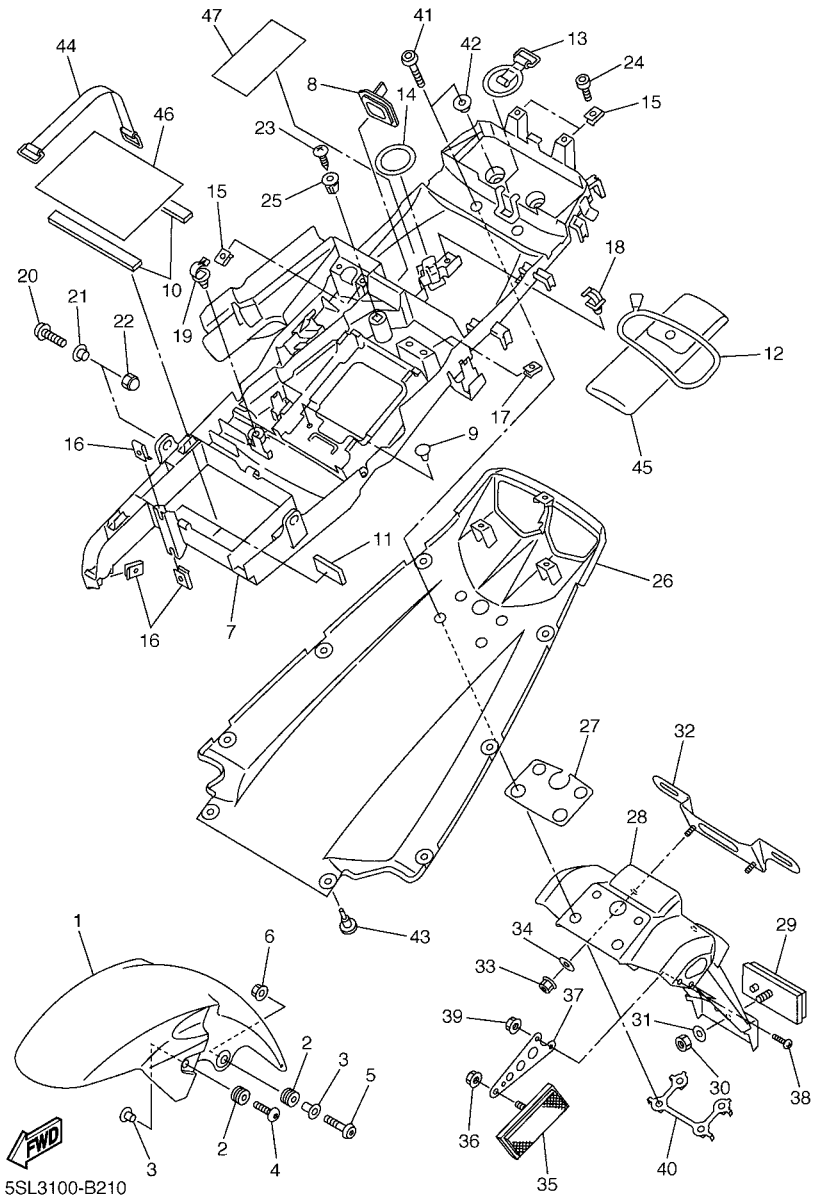

FIG. 21 FENDER

REF. NO.	PART NO.	DESCRIPTION	5SL3	5SL4	5SL5			REMARKS
26	5SL–21611–00–P2	FENDER, REAR	1	1	1			UR S3
27	5SL–21669–00	SEAL	1	1	1			
28	5SL–21629–10	GUARD, MUD	1	1	1			
29	3Y6–85130–02	REAR REFLECTOR ASSY	1	1	1			
30	95607–05100	NUT, U	1	1	1			
31	90201–05725	WASHER, PLATE	1	1	1			
32	5MT–84751–00	BRACKET, LICENSE	1	1	1			
33	95607–06100	NUT, U	2	2	2			
34	90201–06057	WASHER, PLATE	2	2	2			
35	3Y6–85130–02	REAR REFLECTOR ASSY	2	2	2			
36	95707–05500	NUT, FLANGE	2	2	2			
37	5PW–21688–00	BRACKET, REAR STAY	2	2	2			
38	90150–04041	SCREW, ROUND HEAD	4	4	4			
39	95607–04100	NUT, U	4	4	4			
40	5PW–2161G–00	BRACKET 6	1	1	1			
41	92017–06020	BOLT, BUTTON HEAD	4	4	4			
42	90387–065G0	COLLAR	2	2	2			
43	90269–07077	RIVET	2	2	2			
44	5JJ–82131–00	BAND, BATTERY	1	1	1			
45	5SL–28100–00	TOOL KIT	1	1	1			
46	5EB–14733–00	MAT 1	1	1	1			
47	5SL–2179V–00	PLATE, EPA 1(NON CALIFORNIA)	1					
	5SL–2179R–00	PLATE, EPA 2 (CALIFORNIA)		1				

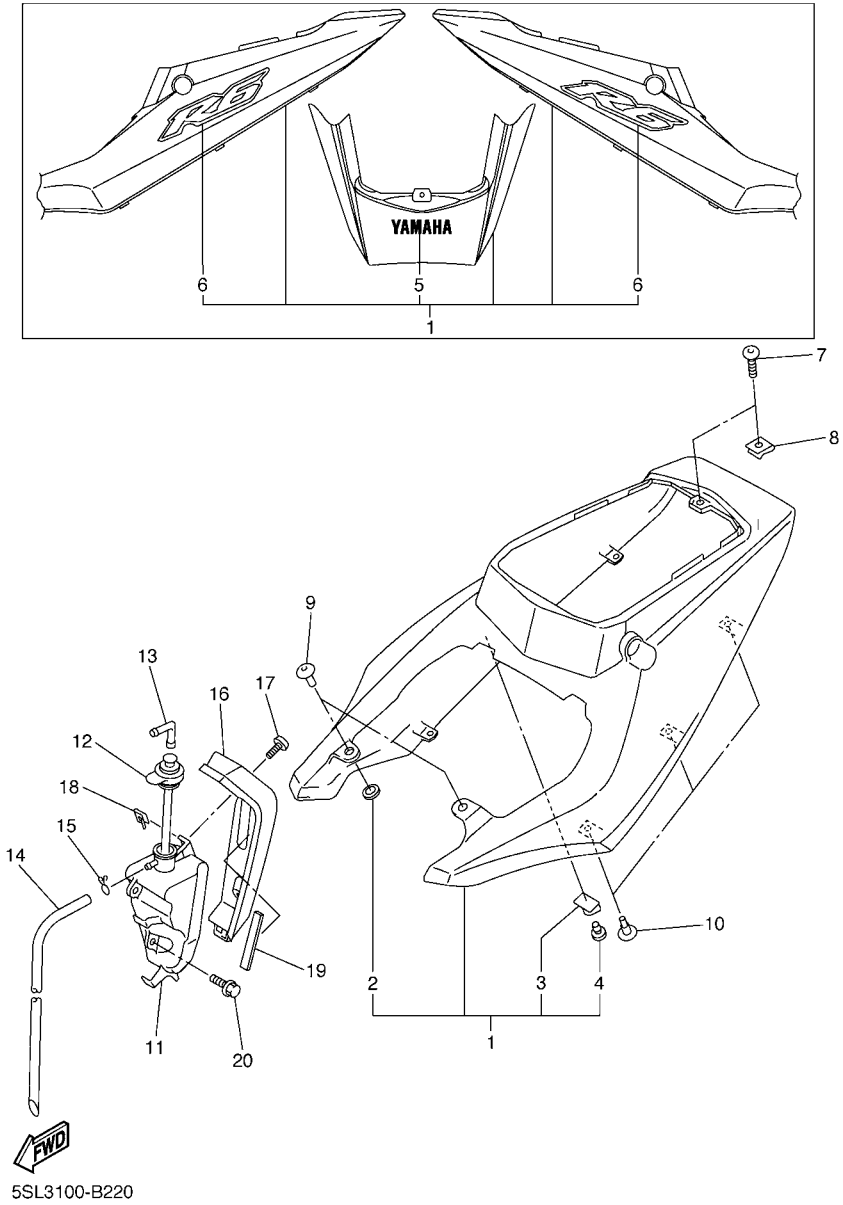

5SL3100-B220

FIG. 22 SIDE COVER

REF. NO.	PART NO.	DESCRIPTION	5SL3	5SL4	5SL5			REMARKS
1	5SL–Y2171–40–P1	COVER, SIDE 1	1	1	1			UR DPBMC
	5SL–Y2171–50–P2	COVER, SIDE 1	1	1	1			UR S3
2	5PW–2174X–00	.DAMPER	2	2	2			
3	5SL–2172E–00	.STAY, SIDE COVER 1	1	1	1			
4	90338–06018	.PLUG	1	1	1			
5	99241–00080	.EMBLEM, YAMAHA	1	1	1			UR FOR DPBMC
	99247–00080	.EMBLEM, YAMAHA	1	1	1			UR FOR S3
6	5SL–21737–00	.EMBLEM	2	2	2			FOR DPBMC
7	90110–05201	BOLT, HEXAGON SOCKET HEAD	1	1	1			
8	90183–05076	NUT, SPRING	1	1	1			
9	90269–07076	RIVET	2	2	2			
10	90269–07077	RIVET	6	6	6			
11	5SL–21871–00	TANK, RECOVERY	1	1	1			
12	4NK–21875–00	CAP	1	1	1			
13	26H–21828–00	ELBOW	1	1	1			
14	90445–08376	HOSE (L330)	1	1	1			
15	90467–08003	CLIP	1	1	1			
16	5SL–2172W–00	COVER	1	1	1			
17	90111–05002	BOLT	2	2	2			
18	90183–050A0	NUT, SPRING	2	2	2			
19	5SL–21746–00	DAMPER	1	1	1			
20	90119–06059	BOLT, WITH WASHER	2	2	2			

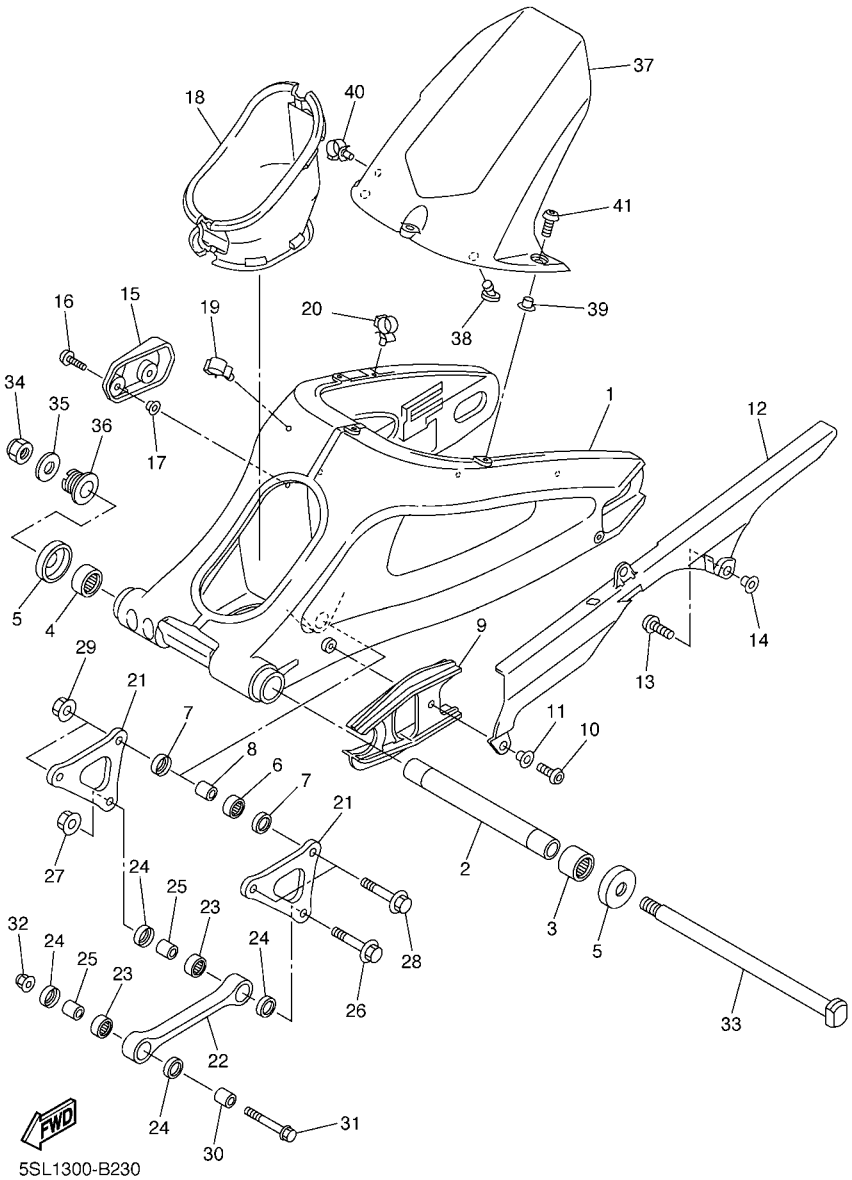

FIG. 23 REAR ARM

REF. NO.	PART NO.	DESCRIPTION	5SL3	5SL4	5SL5			REMARKS
1	5SL–22110–00	REAR ARM COMP.	1	1	1			
2	5EB–22184–00	BUSH	1	1	1			
3	93317–42550	BEARING	1	1	1			
4	93315–42536	BEARING	1	1	1			
5	5JJ–22128–00	COVER, THRUST 1	2	2	2			
6	93315–41762	BEARING	1	1	1			
7	93109–17071	OIL SEAL	2	2	2			
8	90387–1012A	COLLAR	1	1	1			
9	5SL–22151–00	SEAL, GUARD	1	1	1			
10	92017–06016	BOLT, BUTTON HEAD	1	1	1			
11	90387–062X0	COLLAR	1	1	1			
12	5SL–22311–00	CASE, CHAIN	1	1	1			
13	90110–06102	BOLT, HEXAGON SOCKET HEAD	2	2	2			
14	90387–06009	COLLAR	2	2	2			
15	5SL–22381–00	COVER 1	1	1	1			
16	90111–06038	BOLT	2	2	2			
17	90387–06681	COLLAR	2	2	2			
18	5SL–2219X–00	COVER	1	1	1			
19	90464–16012	CLAMP	1	1	1			
20	90464–16011	CLAMP	1	1	1			
21	5SL–2217A–00	ARM, RELAY	2	2	2			
22	5SL–2217M–00	ARM 1	1	1	1			
23	93315–31758	BEARING	2	2	2			
24	93109–17071	OIL SEAL	4	4	4			
25	90387–1012A	COLLAR	2	2	2			
26	90105–10017	BOLT, FLANGE	1	1	1			
27	95607–10200	NUT, SELF-LOCKING	1	1	1			

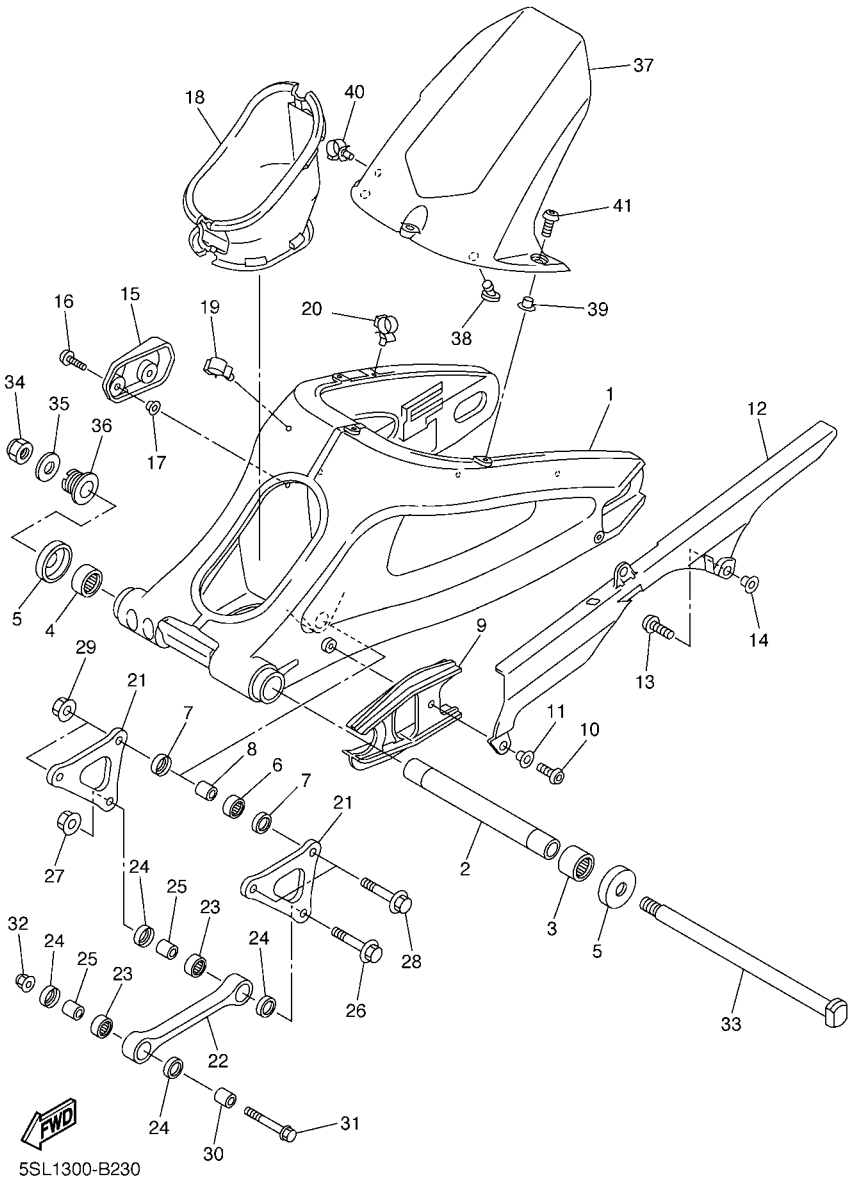

FIG. 23 REAR ARM

REF. NO.	PART NO.	DESCRIPTION	5SL3	5SL4	5SL5			REMARKS
28	90105–10017	BOLT, FLANGE	2	2	2			
29	95607–10200	NUT, SELF-LOCKING	2	2	2			
30	90387–1013U	COLLAR	1	1	1			
31	90105–10018	BOLT, FLANGE	1	1	1			
32	95607–10200	NUT, SELF-LOCKING	1	1	1			
33	4FN–22141–00	SHAFT, PIVOT	1	1	1			
34	90185–18104	NUT, SELF-LOCKING	1	1	1			
35	90201–186M4	WASHER, PLATE	1	1	1			
36	5PW–22125–00	BOLT	1	1	1			
37	5SL–21650–00	REAR FENDER COMP.	1	1	1			
38	5SL–21639–00	DAMPER 2	2	2	2			
39	90387–07717	COLLAR	3	3	3			
40	90464–16012	CLAMP	1	1	1			
41	90111–06038	BOLT	3	3	3			

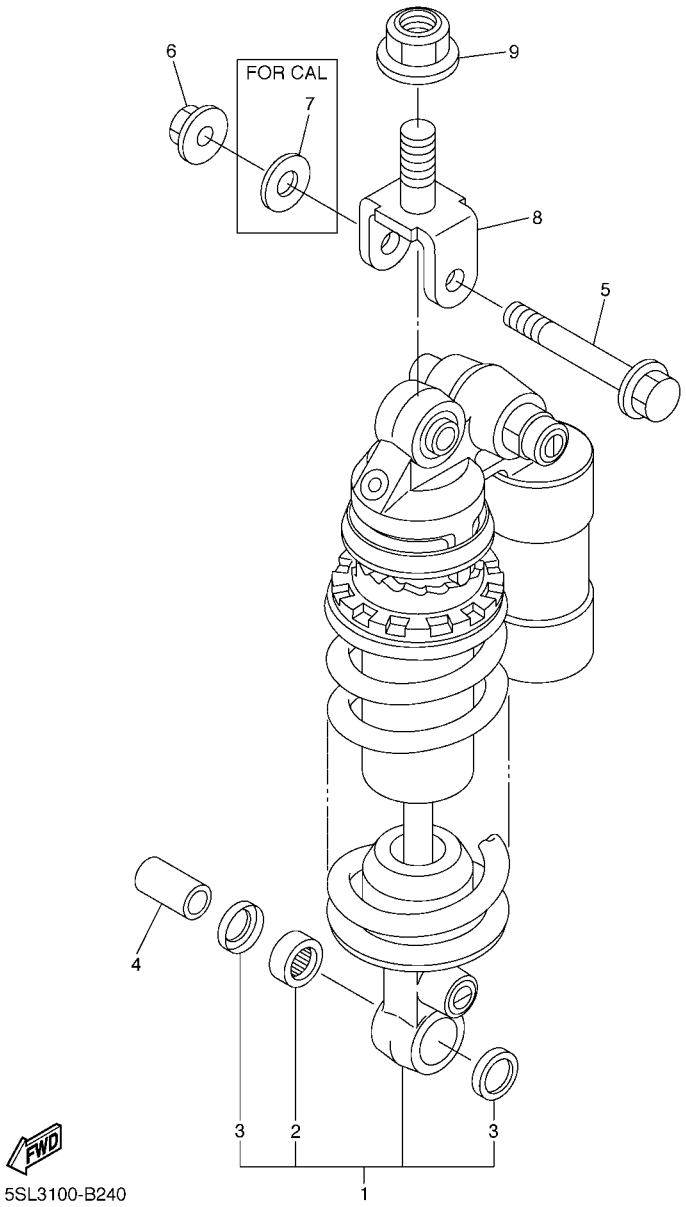

FIG. 24 REAR SUSPENSION

REF. NO.	PART NO.	DESCRIPTION	5SL3	5SL4	5SL5			REMARKS
1	5SL–22210–10	SHOCK ABSORBER ASSY, REAR	1	1				
	5SL–22210–20	SHOCK ABSORBER ASSY, REAR			1			
2	93315–31758	.BEARING	1	1	1			
3	93109–17071	.OIL SEAL	2	2	2			
4	90387–1012A	COLLAR	1	1	1			
5	90105–10017	BOLT, FLANGE	1		1			
	90105–10018	BOLT, FLANGE		1				
6	95607–10200	NUT, SELF-LOCKING	1	1	1			
7	90201–101J1	WASHER, PLATE		1				
8	5SL–22219–00	BRACKET, UPPER	1	1	1			
9	95607–14200	NUT, SELF-LOCKING	1	1	1			

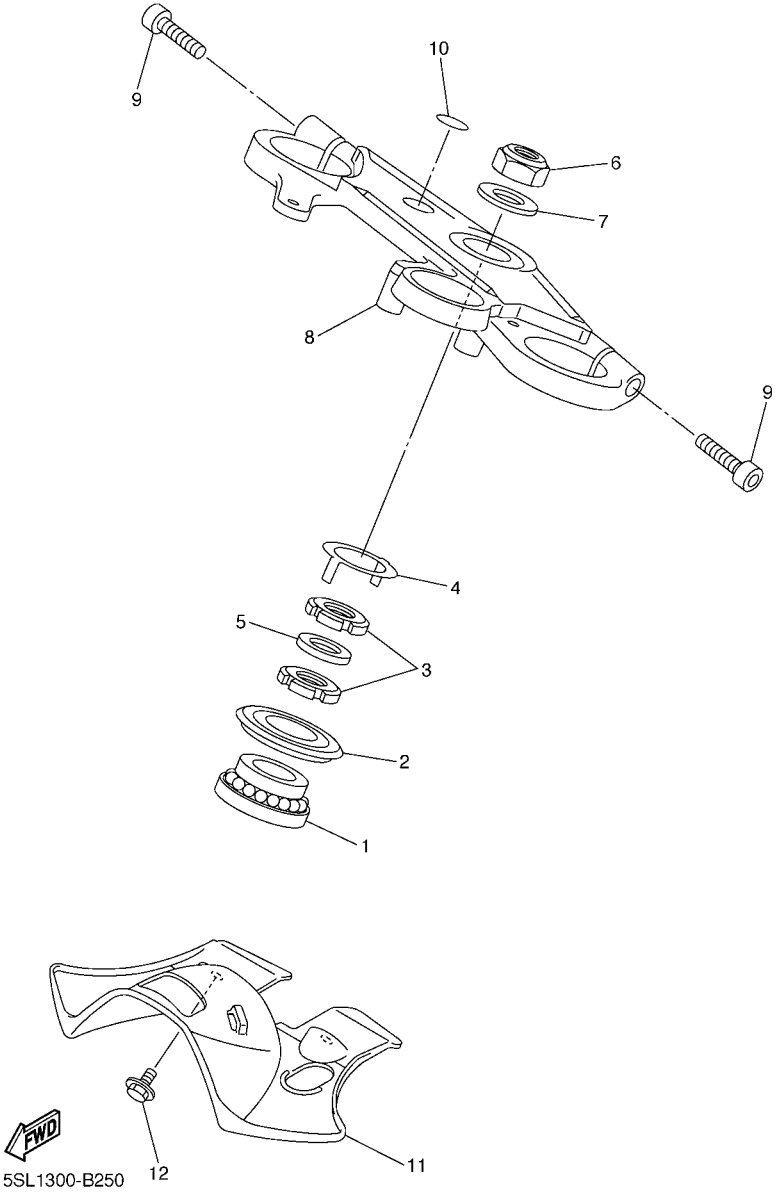

FIG. 25 STEERING

REF. NO.	PART NO.	DESCRIPTION	5SL3	5SL4	5SL5			REMARKS
1	93399–99955	BEARING	1	1	1			
2	4XV–23415–01	COVER, BALL RACE 1	1	1	1			
3	90179–30691	NUT	2	2	2			
4	4XV–23418–00	WASHER, SPECIAL	1	1	1			
5	90202–30235	WASHER, PLATE	1	1	1			
6	90170–28419	NUT	1	1	1			
7	90201–281U8	WASHER, PLATE	1	1	1			
8	5SL–23435–10	CROWN, HANDLE	1	1	1			
9	91314–08030	BOLT	2	2	2			
10	4XV–2341B–00	EMBLEM	1	1	1			
11	5EB–23818–00	COVER, STEERING	1	1	1			
12	90119–06117	BOLT, WITH WASHER	2	2	2			

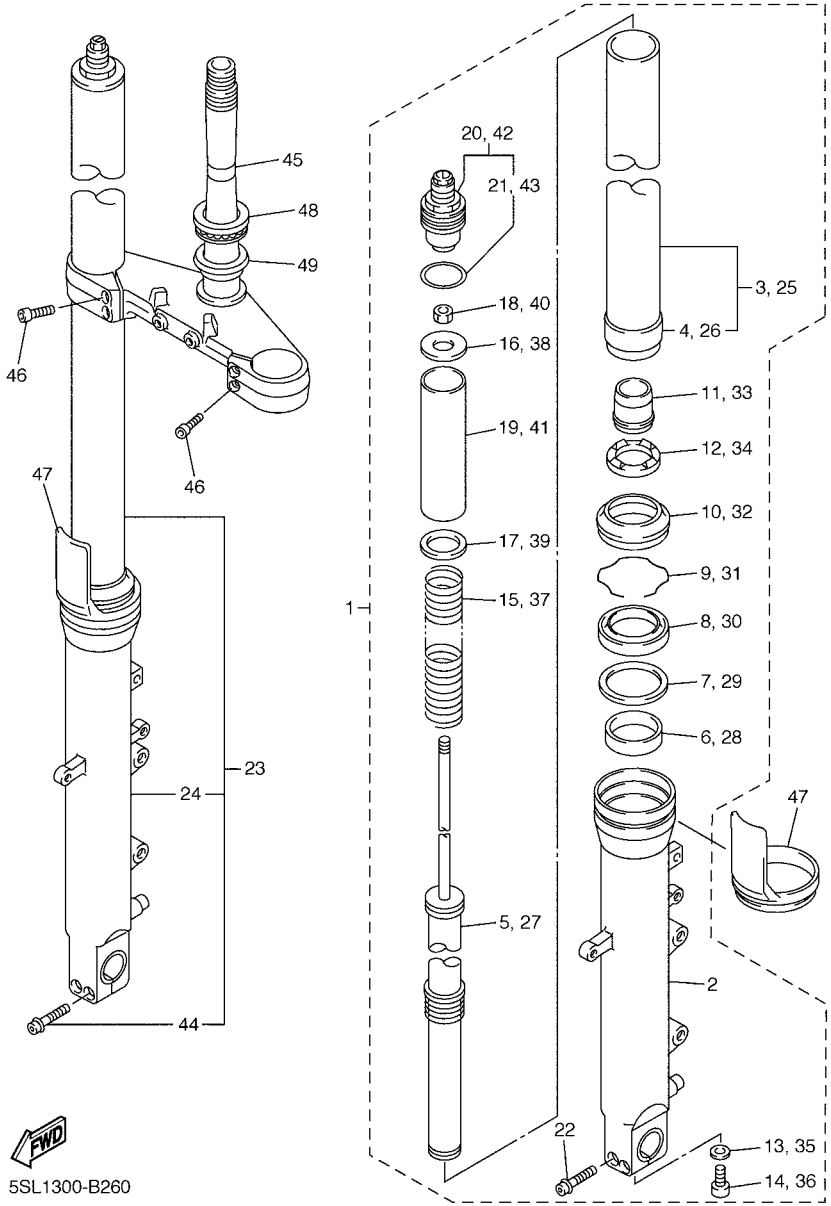

FIG. 26 FRONT FORK

REF. NO.	PART NO.	DESCRIPTION	5SL3	5SL4	5SL5			REMARKS
1	5SL–23102–00	FRONT FORK ASSY (L.H)	1	1	1			
2	5SL–23126–00	.TUBE, OUTER (LEFT)	1	1	1			
3	5SL–23110–00	.INNER TUBE COMP.1	1	1	1			
4	5EB–23171–00	..PISTON, FRONT FORK	1	1	1			
5	5SL–23170–00	.CYLINDER COMP., FRONT FORK	1	1	1			
6	5EB–23125–00	.METAL, SLIDE 1	1	1	1			
7	4V4–23146–L0	.WASHER, OIL SEAL	1	1	1			
8	4PU–23145–01	.OIL SEAL	1	1	1			
9	4V4–23153–L0	.RING, SNAP	1	1	1			
10	4PU–23144–00	.SEAL, DUST	1	1	1			
11	5MT–23173–00	.SPINDLE, TAPER	1	1	1			
12	5MT–23195–00	.RUBBER	1	1	1			
13	2K8–23158–L0	.GASKET	1	1	1			
14	3LC–23181–00	.BOLT, HEXAGON SOCKET HEAD	1	1	1			
15	5SL–23141–00	.SPRING, FRONT FORK	1	1	1			
16	3TJ–23149–10	.WASHER, SPRING UPPER	1	1	1			
17	3LR–23149–00	.WASHER, SPRING UPPER	1	1	1			
18	3LC–23357–00	.NUT	1	1	1			
19	5SL–23118–00	.SPACER	1	1	1			
20	5MT–23111–00	.BOLT, CAP	1	1	1			
21	4V4–23188–L0	..O-RING	1	1	1			
22	91314–08040	.BOLT	2	2	2			
23	5SL–23103–00	FRONT FORK ASSY (R.H)	1	1	1			
24	5SL–23136–00	.TUBE, OUTER (RIGHT)	1	1	1			
25	5SL–23110–00	.INNER TUBE COMP.1	1	1	1			
26	5EB–23171–00	..PISTON, FRONT FORK	1	1	1			
27	5SL–23170–00	.CYLINDER COMP., FRONT FORK	1	1	1			

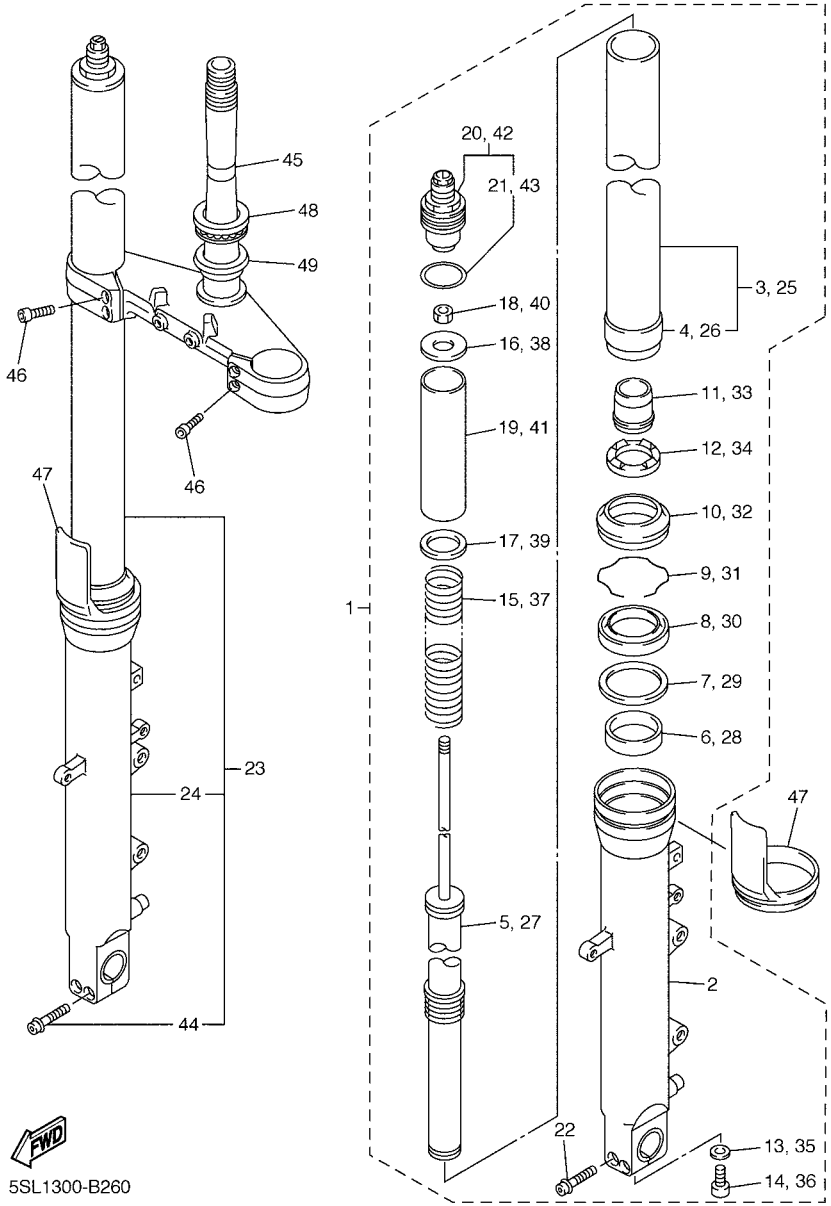

FIG. 26 FRONT FORK

REF. NO.	PART NO.	DESCRIPTION	5SL3	5SL4	5SL5			REMARKS
28	5EB–23125–00	.METAL, SLIDE 1	1	1	1			
29	4V4–23146–L0	.WASHER, OIL SEAL	1	1	1			
30	4PU–23145–01	.OIL SEAL	1	1	1			
31	4V4–23153–L0	.RING, SNAP	1	1	1			
32	4PU–23144–00	.SEAL, DUST	1	1	1			
33	5MT–23173–00	.SPINDLE, TAPER	1	1	1			
34	5MT–23195–00	.RUBBER	1	1	1			
35	2K8–23158–L0	.GASKET	1	1	1			
36	3LC–23181–00	.BOLT, HEXAGON SOCKET HEAD	1	1	1			
37	5SL–23141–00	.SPRING, FRONT FORK	1	1	1			
38	3TJ–23149–10	.WASHER, SPRING UPPER	1	1	1			
39	3LR–23149–00	.WASHER, SPRING UPPER	1	1	1			
40	3LC–23357–00	.NUT	1	1	1			
41	5SL–23118–00	.SPACER	1	1	1			
42	5MT–23111–00	.BOLT, CAP	1	1	1			
43	4V4–23188–L0	..O-RING	1	1	1			
44	91314–08040	.BOLT	2	2	2			
45	5SL–23340–00	UNDER BRACKET COMP.	1	1	1			
46	91314–08025	BOLT	4	4	4			
47	4PU–2331G–00	COVER	2	2	2			
48	93399–99932	BEARING	1	1	1			
49	3FV–23462–00	SEAL, STEERING	1	1	1			

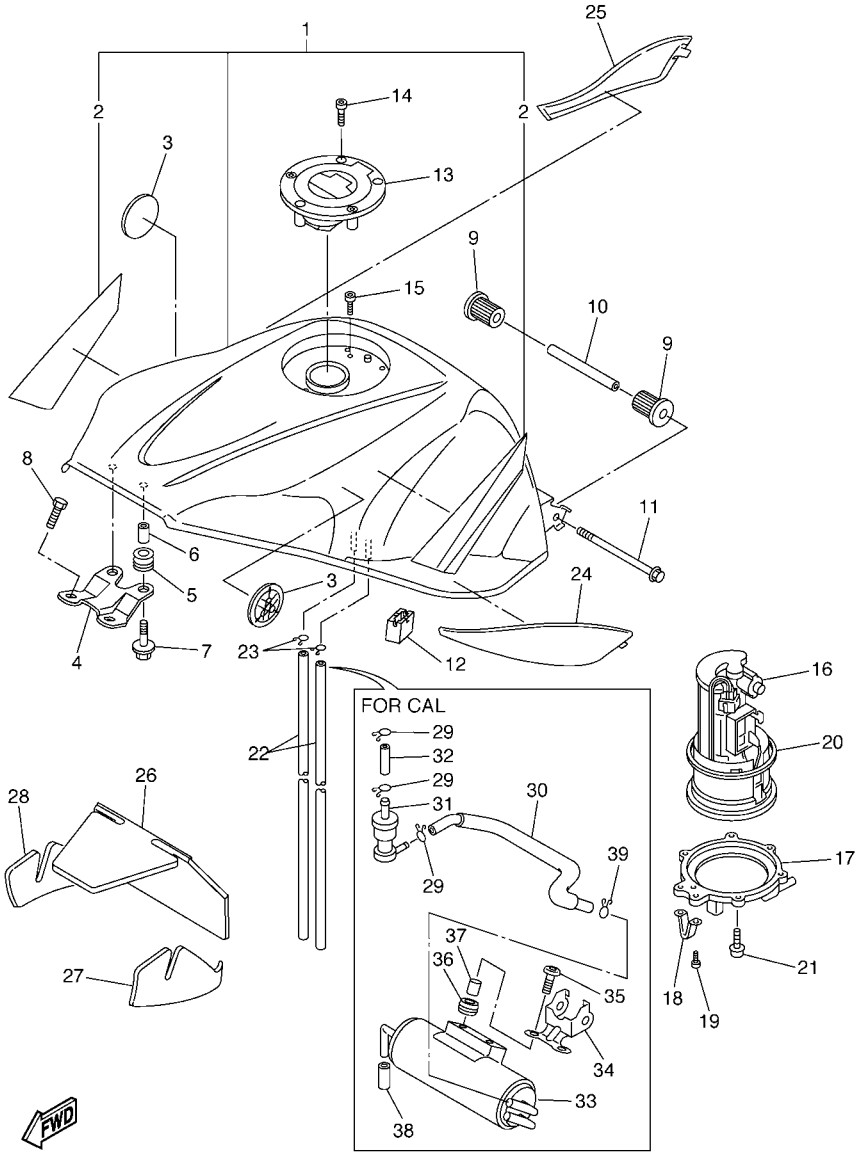

5SL3100-B270

FIG. 27 FUEL TANK

REF. NO.	PART NO.	DESCRIPTION	5SL3	5SL4	5SL5			REMARKS
1	5SL–Y2410–30–02	FUEL TANK COMP.	1	1	1			UR DPBMC
	5SL–YK241–M0–P0	FUEL TANK COMP.	1	1	1			UR S3
2	5SL–24240–10	.GRAPHIC SET	1	1	1			FOR DPBMC
3	5SL–2413B–00	EMBLEM	2	2	2			
4	5SL–24191–00	BRACKET, FUEL TANK 1	1	1	1			
5	90480–15483	GROMMET	2	2	2			
6	90387–06054	COLLAR	2	2	2			
7	90119–06062	BOLT, WITH WASHER	2	2	2			
8	90110–06079	BOLT, HEXAGON SOCKET HEAD	2	2	2			
9	5SL–24183–00	DAMPER, LOCATING 3	2	2	2			
10	90387–06055	COLLAR	1	1	1			
11	95827–06090	BOLT, FLANGE	1	1	1			
12	5SL–24182–00	DAMPER, LOCATING 2	2	2	2			
13	5JJ–24602–00	CAP ASSY	1	1	1			
14	90110–05112	BOLT, HEXAGON SOCKET HEAD	3	3	3			
15	91317–05010	BOLT	1	1	1			
16	5PW–13907–00	FUEL PUMP COMP.	1	1	1			
17	5SL–24491–00	BRACKET, FUEL PUMP	1	1	1			
18	5PW–24192–00	BRACKET, FUEL TANK 2	1	1	1			
19	98907–05008	SCREW, BIND	2	2	2			
20	5JW–24486–00	O-RING	1	1	1			
21	90110–05014	BOLT, HEXAGON SOCKET HEAD	6	6	6			
22	90445–102G9	HOSE (L650)	2	1	2			
23	90467–10008	CLIP	2	1	2			
24	5SL–24129–00	COVER, SIDE 1	1	1	1			
25	5SL–24139–00	COVER, SIDE 2	1	1	1			
26	5SL–2414H–00	DAMPER, PLATE 1	1	1	1			

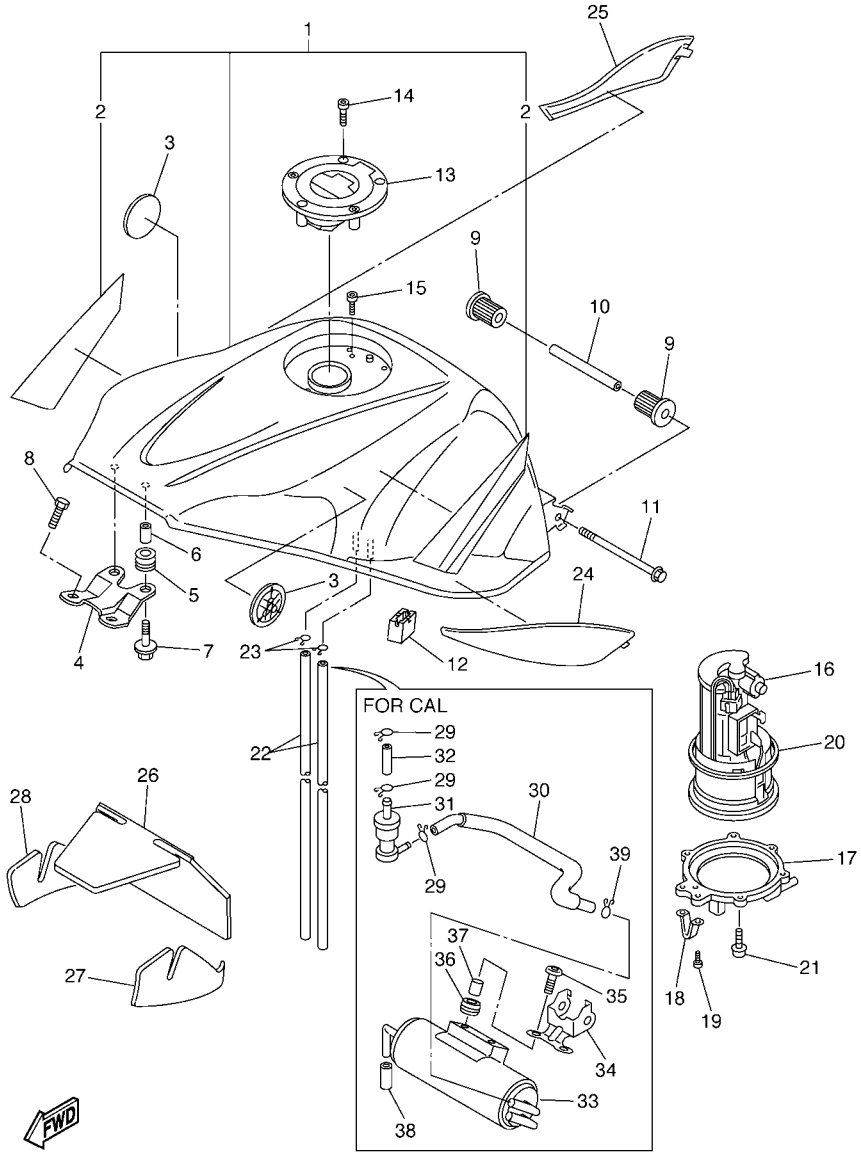

FIG. 27 FUEL TANK

REF. NO.	PART NO.	DESCRIPTION	5SL3	5SL4	5SL5			REMARKS
27	5SL–2414J–00	DAMPER, PLATE 2	1	1	1			
28	5SL–2414K–00	DAMPER, PLATE 3	1	1	1			
29	90467–10008	CLIP		3				
30	5SL–24314–00	PIPE 4		1				
31	5RB–24180–00	ROLL OVER VALVE ASSY		1				
32	90445–11732	HOSE (L30)		1				
33	5SL–24170–00	CANISTER ASSY		1				
34	5SL–2419F–00	BRACKET, CANISTOR		1				
35	90110–06200	BOLT, HEXAGON SOCKET HEAD		2				
36	90480–13018	GROMMET		2				
37	90387–062L2	COLLAR		2				
38	90445–11418	HOSE (L18)		1				
39	90467–10008	CLIP		1				

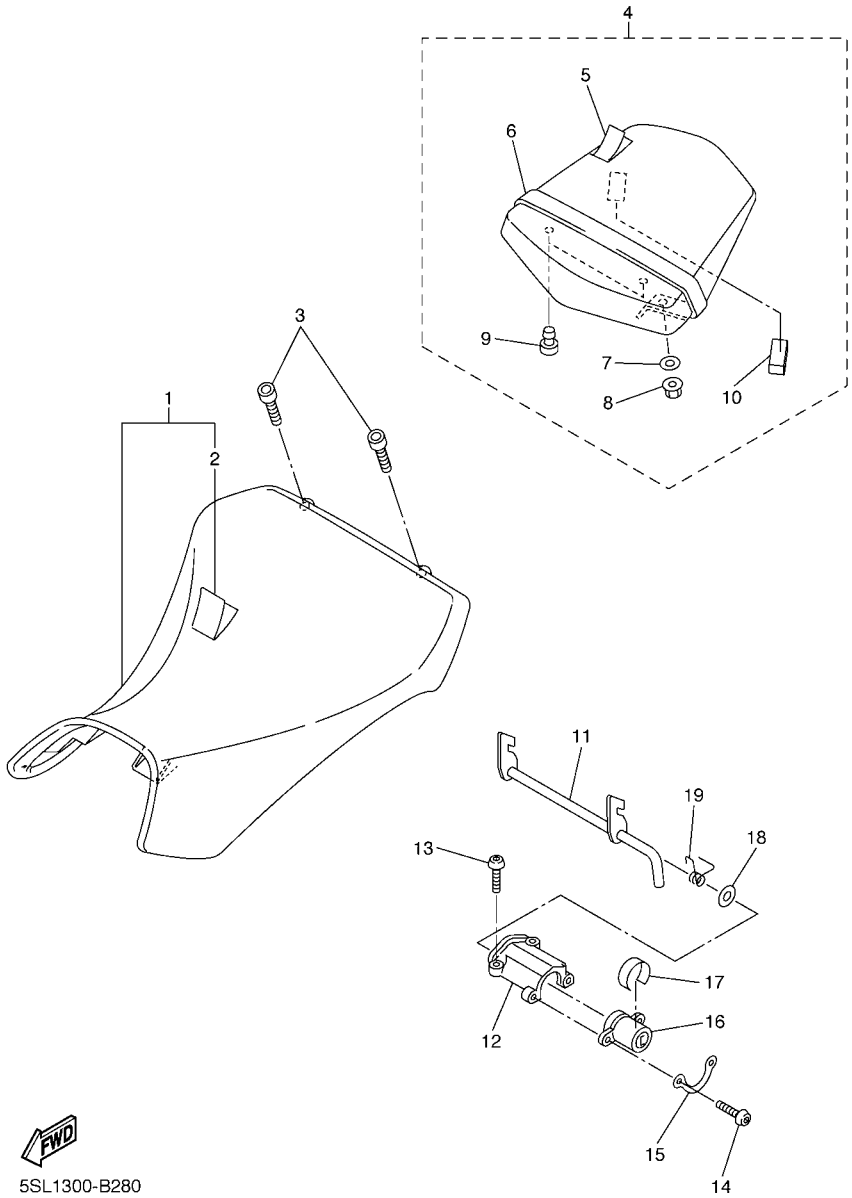

FIG. 28 SEAT

REF. NO.	PART NO.	DESCRIPTION	5SL3	5SL4	5SL5			REMARKS
1	5SL–24710–00	SINGLE SEAT ASSY	1	1	1			
2	5SL–2470F–00	.SEAT COVER COMP.	1	1	1			
3	90110–06258	BOLT, HEXAGON SOCKET HEAD	2	2	2			
4	5SL–24750–00	TANDEM SEAT ASSY	1	1	1			
5	5SL–24751–00	.COVER, TANDEM SEAT	1	1	1			
6	5SL–24720–00	.SEAT BAND ASSY	1	1	1			
7	90201–06008	.WASHER, PLATE	2	2	2			
8	95607–06200	.NUT, SELF U-FLANGE	2	2	2			
9	5SL–24723–00	.DAMPER, SEAT	2	2	2			
10	5SL–24724–00	.DAMPER, SEAT	1	1	1			
11	5SL–24780–00	SEAT LOCK ASSY	1	1	1			
12	5SL–24792–00	PLATE	1	1	1			
13	92017–06025	BOLT, BUTTON HEAD	2	2	2			
14	92017–06014	BOLT, BUTTON HEAD	2	2	2			
15	5SL–2479R–00	PLATE, COVER	1	1	1			
16	5SL–W2470–00	SEAT LOCK ASSY	1	1	1			
17	5SL–24858–00	SEAL	1	1	1			
18	90202–08001	WASHER, PLATE	2	2	2			
19	5SL–24758–00	SPRING	1	1	1			

FIG. 29 FRONT WHEEL

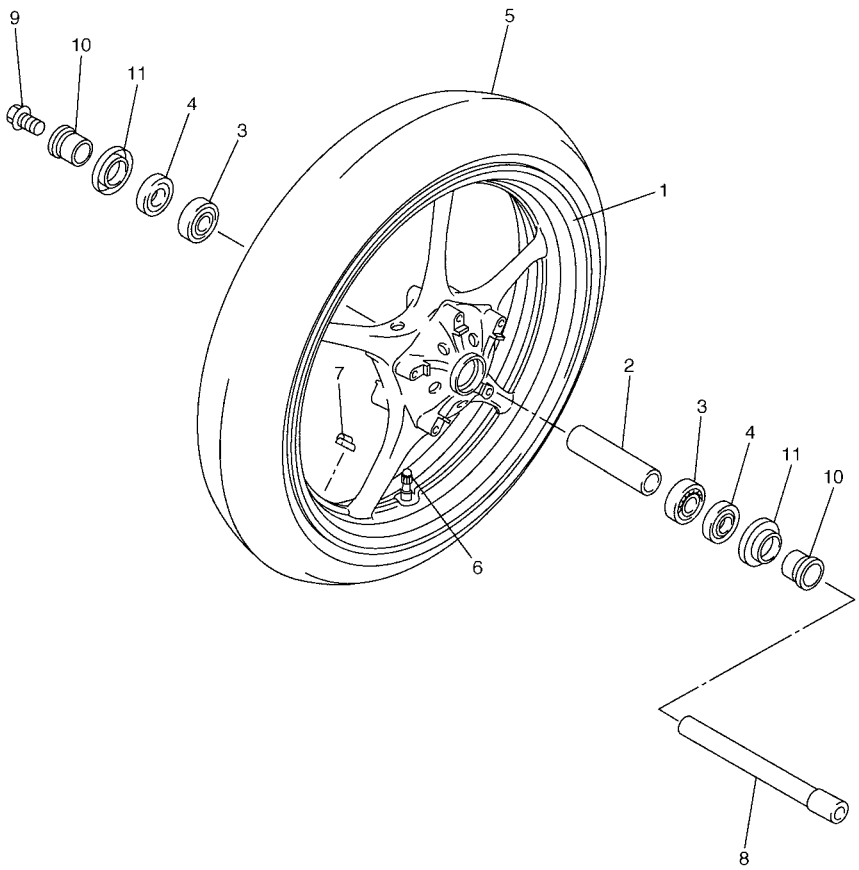

5SL1332-B290

REF. NO.	PART NO.	DESCRIPTION	5SL3	5SL4	5SL5			REMARKS
1	5SL–25168–00–98	CAST WHEEL, FRONT	1	1	1			LGB
2	4XV–25117–00	SPACER, BEARING	1	1	1			
3	93306–00420	BEARING (B6004)	2	2	2			
4	93106–28043	OIL SEAL	2	2	2			
5	94112–17062	TIRE(120/60ZR17 M/C 55W D208F)	1	1	1			DUNLOP
6	93900–00030	VALVE, RIM (TR412)	1	1	1			TAIHEIYO
7	5MT–25398–00	BALANCER, WHEEL (10G)	1	1	1			UR
	5MT–25398–10	BALANCER, WHEEL (20G)	1	1	1			UR
	5MT–25398–20	BALANCER, WHEEL (30G)	1	1	1			UR
8	5SL–25181–00	AXLE, WHEEL	1	1	1			
9	90105–14002	BOLT, FLANGE	1	1	1			
10	4XV–25186–00	COLLAR, WHEEL	2	2	2			
11	4XV–25118–00	COVER, HUB DUST	2	2	2			

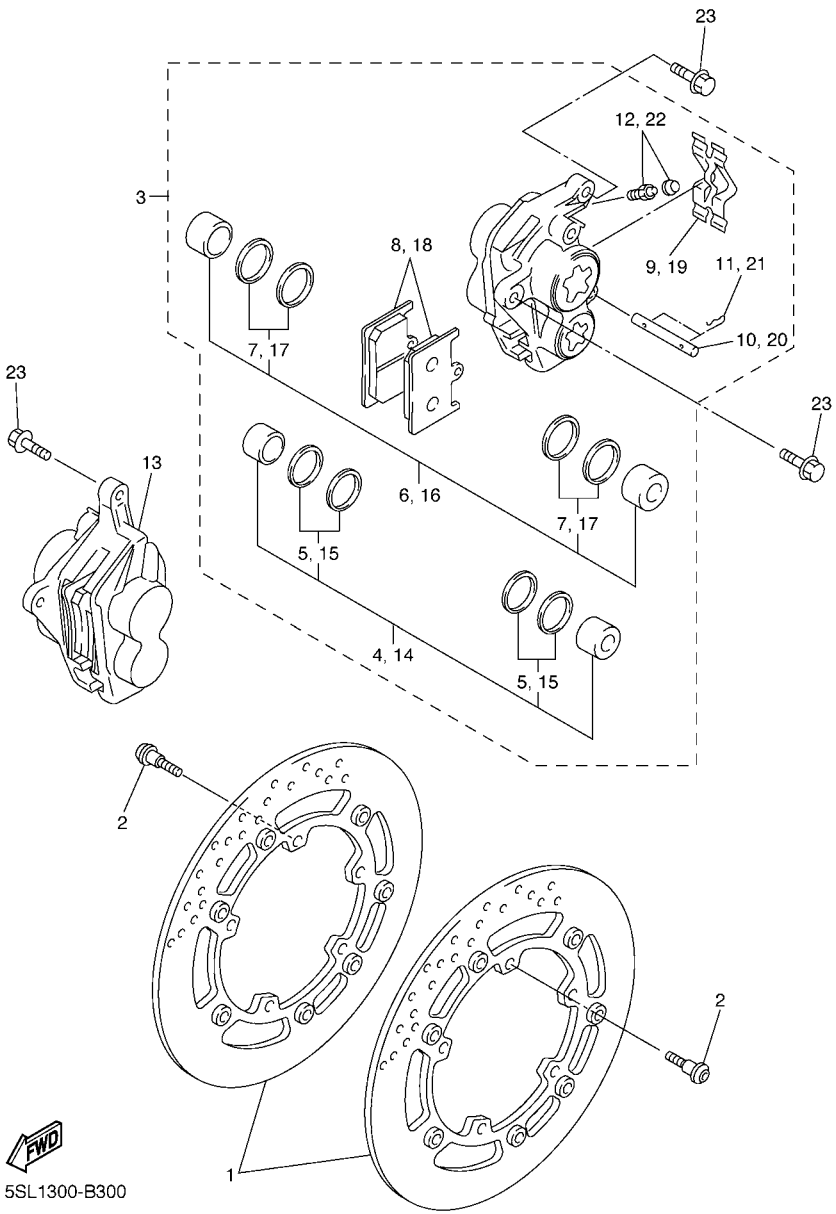

FIG. 30 FRONT BRAKE CALIPER

REF. NO.	PART NO.	DESCRIPTION	5SL3	5SL4	5SL5			REMARKS
1	5SL–2581T–00	DISK BRAKE ASSY	2	2	2			
2	90109–064G6	BOLT	10	10	10			
3	5SL–2580T–00	CALIPER ASSY (LEFT)	1	1	1			
4	4SV–W0057–00	.PISTON ASSY, CALIPER	1	1	1			
5	3MA–W0047–10	..CALIPER SEAL KIT	1	1	1			
6	4SV–W0057–10	.PISTON ASSY, CALIPER	1	1	1			
7	3GM–W0047–10	..CALIPER SEAL KIT	1	1	1			
8	5SL–W0045–00	.BRAKE PAD KIT	1	1	1			
9	4SV–25919–00	.SUPPORT, PAD	1	1	1			
10	4SV–25924–00	.PIN, PAD	1	1	1			
11	3GM–25925–00	.CLIP	2	2	2			
12	1J3–W0048–00	.BLEED SCREW KIT	1	1	1			
13	5SL–2580U–00	CALIPER ASSY (RIGHT)	1	1	1			
14	4SV–W0057–00	.PISTON ASSY, CALIPER	1	1	1			
15	3MA–W0047–10	..CALIPER SEAL KIT	1	1	1			
16	4SV–W0057–10	.PISTON ASSY, CALIPER	1	1	1			
17	3GM–W0047–10	..CALIPER SEAL KIT	1	1	1			
18	5SL–W0045–00	.BRAKE PAD KIT	1	1	1			
19	4SV–25919–00	.SUPPORT, PAD	1	1	1			
20	4SV–25924–00	.PIN, PAD	1	1	1			
21	3GM–25925–00	.CLIP	2	2	2			
22	1J3–W0048–00	.BLEED SCREW KIT	1	1	1			
23	90105–105A7	BOLT, FLANGE	4	4	4			

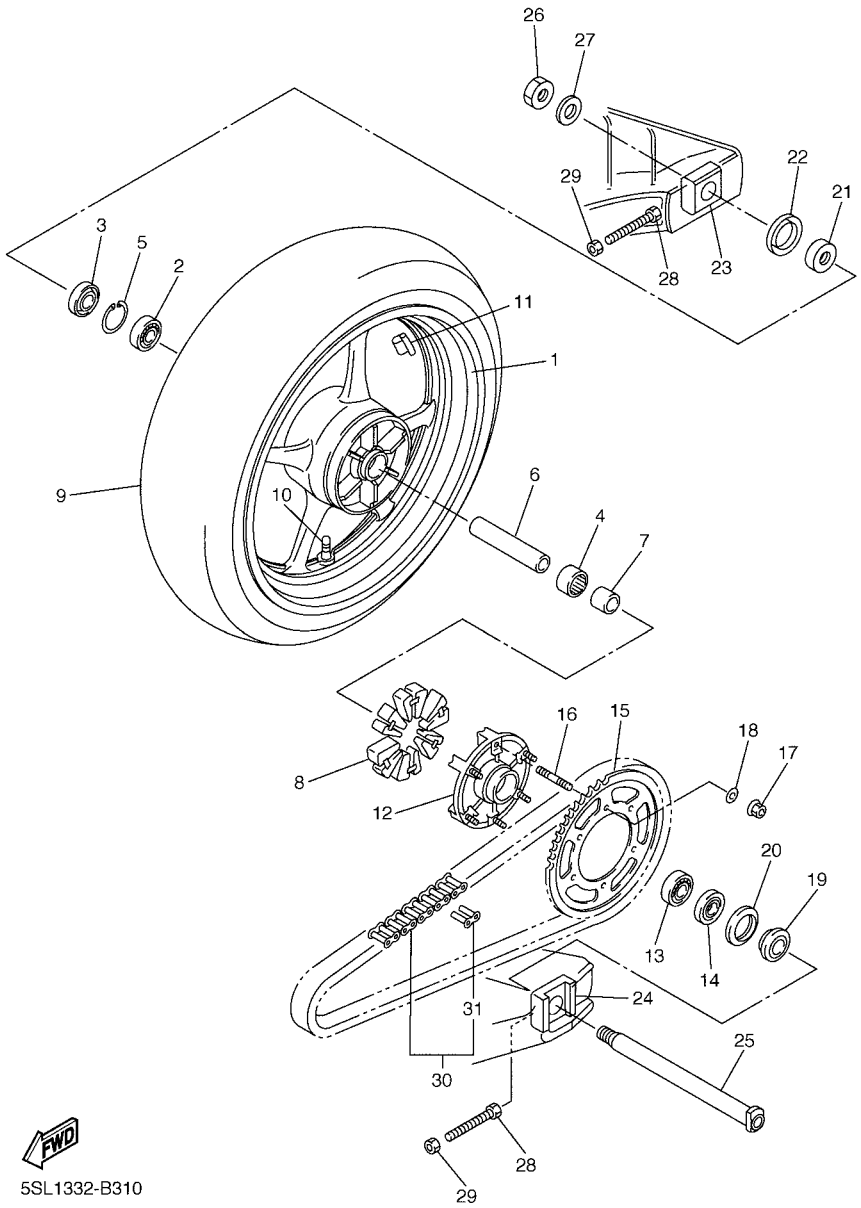

FIG. 31 REAR WHEEL

REF. NO.	PART NO.	DESCRIPTION	5SL3	5SL4	5SL5			REMARKS
1	5SL–25338–00–98	CAST WHEEL, REAR	1	1	1			LGB
2	93306–20531	BEARING	1	1	1			
3	93106–40013	OIL SEAL	1	1	1			
4	93317–43580	BEARING	1	1	1			
5	93420–61M07	CIRCLIP	1	1	1			
6	4XV–25317–00	SPACER, BEARING	1	1	1			
7	5SL–25383–00	COLLAR, WHEEL	1	1	1			
8	5SL–25364–00	DAMPER	6	6	6			
9	94118–17033	TIRE (180/55ZR17 M/C 73W D208)	1	1	1			DUNLOP
10	93900–00030	VALVE, RIM (TR412)	1	1	1			TAIHEIYO
11	5MT–25398–00	BALANCER, WHEEL (10G)	1	1	1			UR
	5MT–25398–10	BALANCER, WHEEL (20G)	1	1	1			UR
	5MT–25398–20	BALANCER, WHEEL (30G)	1	1	1			UR
12	5SL–25366–00	CLUTCH, HUB	1	1	1			
13	93306–20531	BEARING	1	1	1			
14	93106–40013	OIL SEAL	1	1	1			
15	5SL–25448–20	SPROCKET, DRIVEN (48T)	1	1	1			
16	90116–10485	BOLT, STUD	6	6	6			
17	90185–10009	NUT, SELF-LOCKING	6	6	6			
18	90201–10021	WASHER, PLATE	6	6	6			
19	5SL–25376–00	COLLAR, WHEEL	1	1	1			
20	5SL–25367–00	COVER, HUB DUST	1	1	1			
21	4XV–25376–00	COLLAR, WHEEL	1	1	1			
22	5SL–25327–00	COVER, PLATE	1	1	1			
23	5SL–25388–00	PULLER, CHAIN 1	1	1	1			
24	5SL–25389–00	PULLER, CHAIN 2	1	1	1			
25	5SL–25381–00	AXLE, WHEEL	1	1	1			

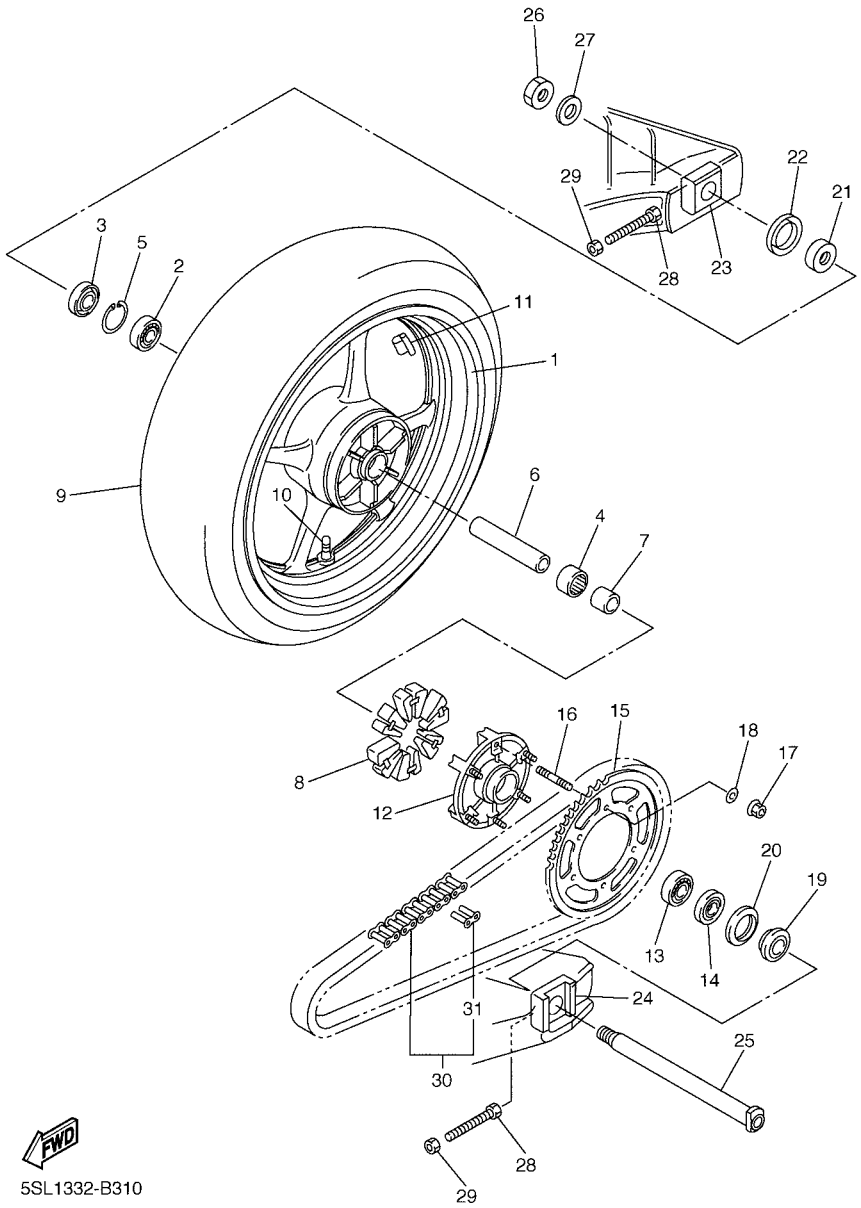

FIG. 31 REAR WHEEL

REF. NO.	PART NO.	DESCRIPTION	5SL3	5SL4	5SL5			REMARKS
26	90185–24165	NUT, SELF-LOCKING	1	1	1			
27	90201–257R5	WASHER, PLATE	1	1	1			
28	90101–08766	BOLT	2	2	2			
29	95307–08600	NUT	2	2	2			
30	9Y581–55115	CHAIN (DID532ZLVKA1-L116)	1	1	1			
31	94681–55031	.JOINT, CHAIN	1	1	1			

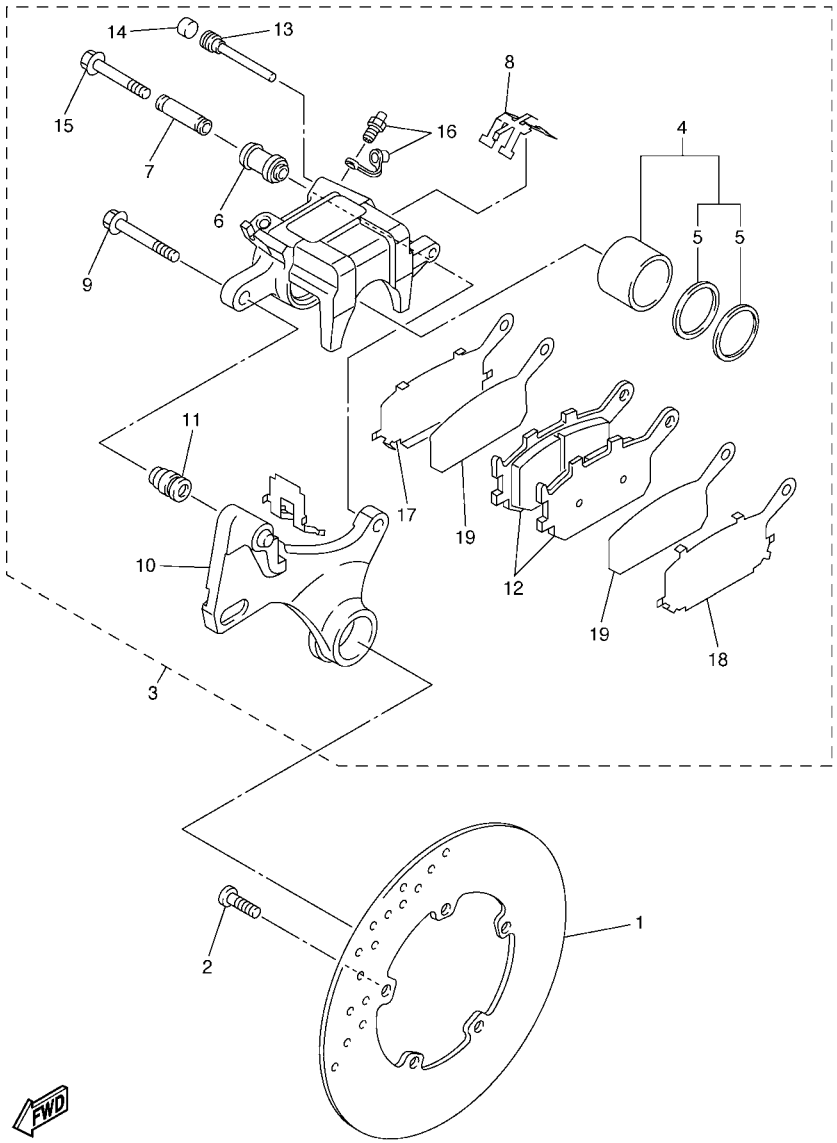

5SL1300-B320

FIG. 32 REAR BRAKE CALIPER

REF. NO.	PART NO.	DESCRIPTION	5SL3	5SL4	5SL5			REMARKS
1	5SL–2582W–00	DISK, REAR BRAKE 2	1	1	1			
2	90109–08045	BOLT	5	5	5			
3	5SL–2580W–00	CALIPER ASSY, REAR 2	1	1	1			
4	5SL–W0057–00	.PISTON ASSY, CALIPER	1	1	1			
5	5SL–W0047–00	..CALIPER SEAL KIT	1	1	1			
6	5SL–25917–00	.BOOT, CALIPER	1	1	1			
7	5SL–25838–00	.SLEEVE, CALIPER	1	1	1			
8	5SL–25919–00	.SUPPORT, PAD	1	1	1			
9	5SL–25914–00	.PIN, SLIDE	1	1	1			
10	5SL–25921–00	.BRACKET, SUPPORT	1	1	1			
11	3JD–25917–00	.BOOT, CALIPER	1	1	1			
12	5SL–W0046–00	.BRAKE PAD KIT 2	1	1	1			
13	8CR–25924–00	.PIN, PAD	1	1	1			
14	5DH–25916–00	.PLUG	1	1	1			
15	5SL–25926–00	.BOLT	1	1	1			
16	1UY–W0048–00	.BLEED SCREW KIT	1	1	1			
17	5SL–25827–00	.SHIM, CALIPER	1	1	1			
18	5SL–25827–10	.SHIM, CALIPER	1	1	1			
19	5SL–25828–00	.SHIM, CALIPER	2	2	2			

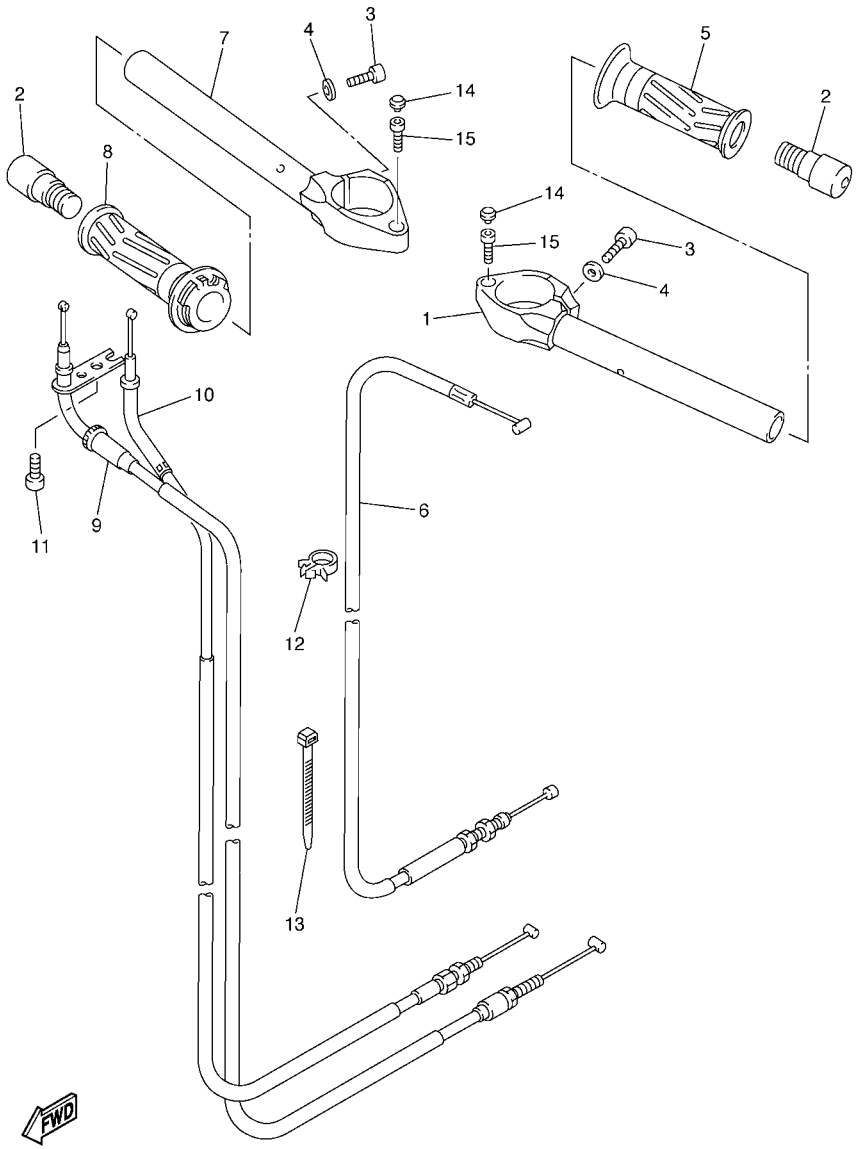

5SL1300-B330

FIG. 33 STEERING HANDLE & CABLE

REF. NO.	PART NO.	DESCRIPTION	5SL3	5SL4	5SL5			REMARKS
1	5SL–26121–00	HANDLEBAR (LEFT)	1	1	1			
2	5EB–26246–00	END, GRIP	2	2	2			
3	91314–08030	BOLT	2	2	2			
4	90201–086J0	WASHER, PLATE	2	2	2			
5	4YR–26241–01	GRIP (LEFT)	1	1	1			
6	5SL–26335–00	CABLE, CLUTCH	1	1	1			
7	5SL–26122–00	HANDLEBAR (RIGHT)	1	1	1			
8	5SL–26240–00	GRIP ASSY	1	1	1			
9	5SL–26311–00	CABLE, THROTTLE 1	1	1	1			
10	5SL–26312–00	CABLE, THROTTLE 2	1	1	1			
11	91317–05014	BOLT	1	1	1			
12	90464–15157	CLAMP	2	2	2			
13	90464–15195	CLAMP	1	1	1			
14	2H9–23469–00	CAP, BOLT	2	2	2			
15	91317–06020	BOLT	2	2	2			

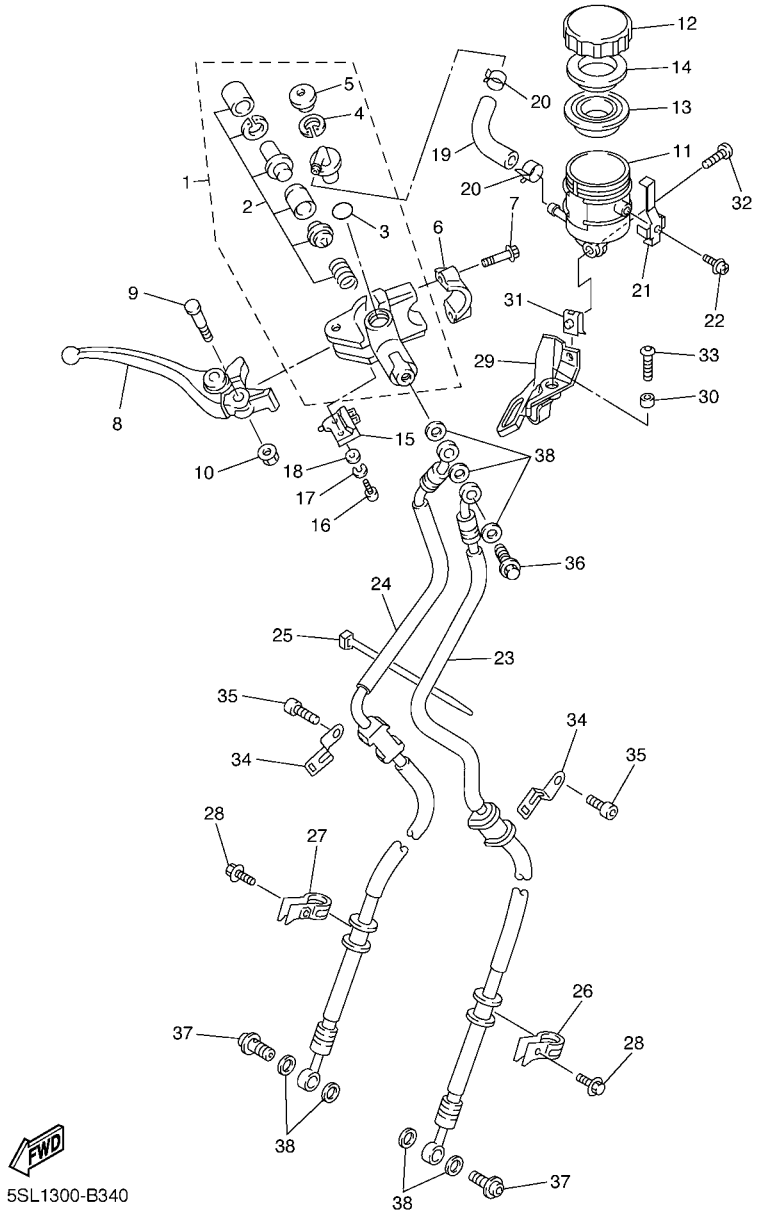

FIG. 34 FRONT MASTER CYLINDER

REF. NO.	PART NO.	DESCRIPTION	5SL3	5SL4	5SL5			REMARKS
1	5EB–W2587–01	MASTER CYLINDER SUB ASSY	1	1	1			
2	5MT–W0041–00	.CYLINDER KIT, MASTER	1	1	1			
3	93210–15620	.O-RING	1	1	1			
4	2VN–25866–00	.CIRCLIP	1	1	1			
5	3FV–2589A–00	.COVER, DUST	1	1	1			
6	56A–25867–00	BRACKET, MASTER CYLINDER	1	1	1			
7	5EB–26332–00	BOLT	2	2	2			
8	5SL–83922–00	LEVER 2	1	1	1			
9	3FV–2589F–00	BOLT, LEVER	1	1	1			
10	95606–06100	NUT, U	1	1	1			
11	5SL–25894–10	TANK, RESERVOIR	1	1	1			
12	3GM–25852–50	CAP, RESERVOIR	1	1	1			
13	3FV–25854–00	DIAPHRAGM, RESERVOIR	1	1	1			
14	2J2–25855–50	BUSH,DIAPHRAGM	1	1	1			
15	4HM–83980–00	FRONT STOP SWITCH ASSY	1	1	1			
16	98502–04012	SCREW, PAN HEAD	1	1	1			
17	92902–04100	WASHER, SPRING	1	1	1			
18	92902–04600	WASHER, PLATE	1	1	1			
19	5PW–2582F–00	HOSE	1	1	1			
20	3PA–24356–00	CLIP, PIPE 1	2	2	2			
21	3FV–2589G–00	HOLDER	1	1	1			
22	3GM–2589H–00	SCREW	1	1	1			
23	5SL–25872–00	HOSE, BRAKE 1	1	1	1			
24	5SL–25873–00	HOSE, BRAKE 2	1	1	1			
25	3MA–82591–00	BAND	1	1	1			
26	5SL–25886–00	HOLDER, BRAKE HOSE	1	1	1			
27	5SL–25887–00	HOLDER, BRAKE HOSE	1	1	1			

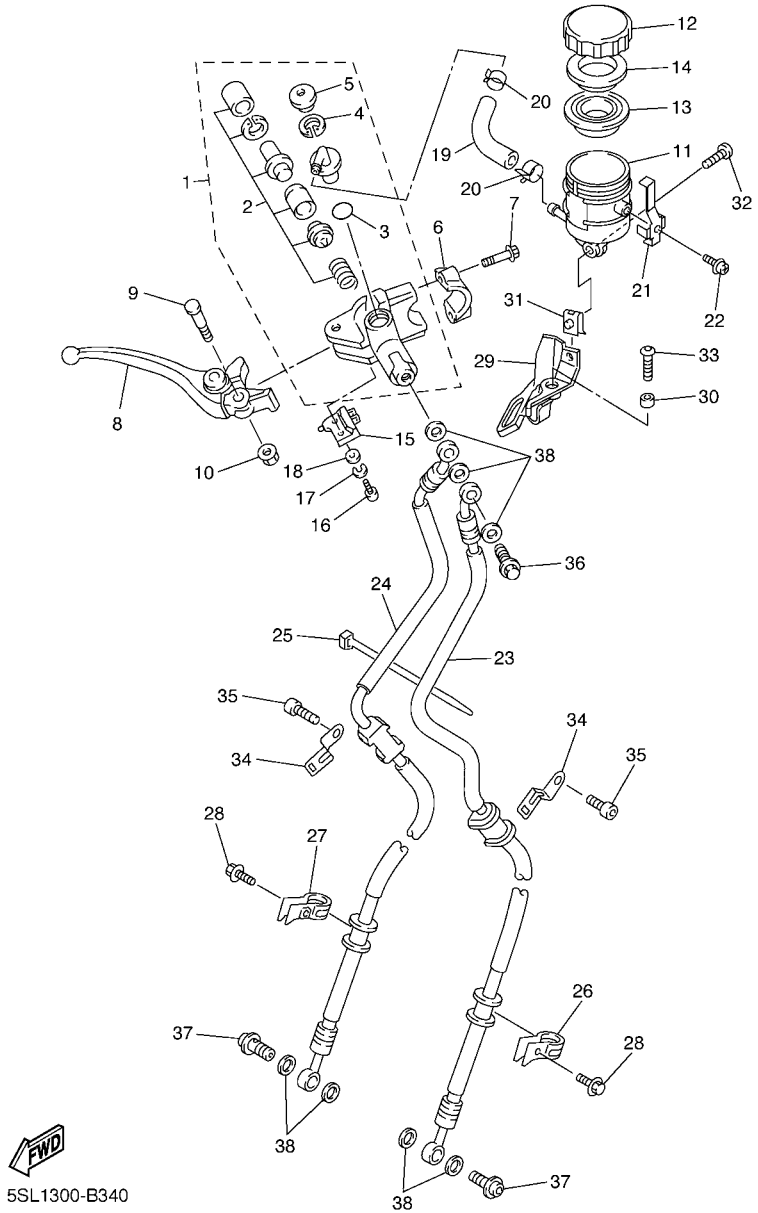

FIG. 34 FRONT MASTER CYLINDER

REF. NO.	PART NO.	DESCRIPTION	5SL3	5SL4	5SL5			REMARKS
28	90105–06041	BOLT, FLANGE	2	2	2			
29	5SL–26292–00	STAY	1	1	1			
30	90387–06057	COLLAR	1	1	1			
31	90183–050A0	NUT, SPRING	1	1	1			
32	90149–05244	SCREW	1	1	1			
33	90111–06041	BOLT	1	1	1			
34	5SL–25876–00	HOLDER, BRAKE HOSE 2	2	2	2			
35	91317–06012	BOLT	2	2	2			
36	90401–10160	BOLT, UNION	1	1	1			
37	90401–10172	BOLT, UNION	2	2	2			
38	90201–10118	WASHER, PLATE	7	7	7			

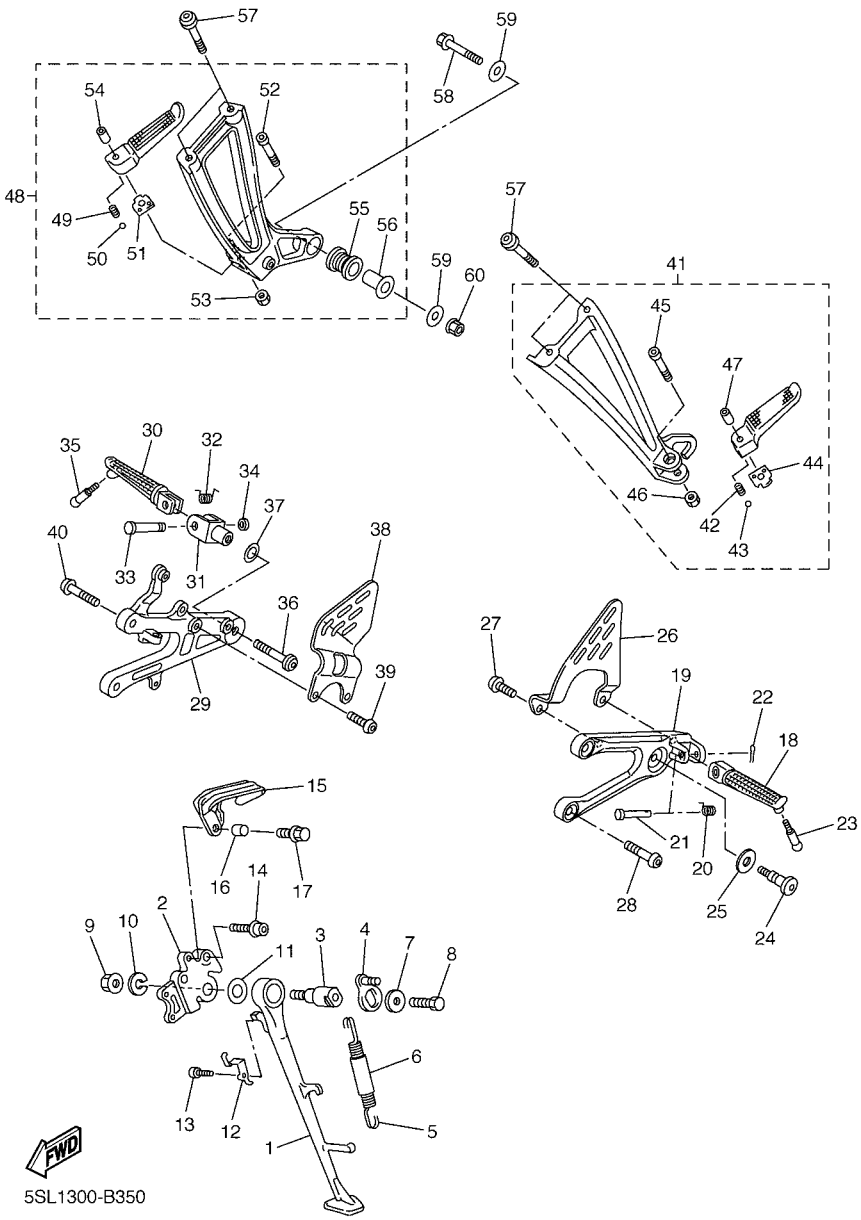

FIG. 35 STAND & FOOTREST

REF. NO.	PART NO.	DESCRIPTION	5SL3	5SL4	5SL5			REMARKS
1	5SL–27311–00	STAND, SIDE	1	1	1			
2	5SL–27321–00	BRACKET, SIDE STAND	1	1	1			
3	4NX–27351–00	GUIDE, SIDE STAND	1	1	1			
4	5PW–27352–00	HOOK, SIDE STAND	1	1	1			
5	90506–18008	SPRING, TENSION	1	1	1			
6	90445–19002	HOSE (L60)	1	1	1			
7	90201–081R9	WASHER, PLATE	1	1	1			
8	90101–08662	BOLT	1	1	1			
9	95607–10200	NUT, SELF-LOCKING	1	1	1			
10	90201–101J1	WASHER, PLATE	1	1	1			
11	90201–146F9	WASHER, PLATE	1	1	1			
12	5JJ–27315–00	LINK, SIDE STAND	1	1	1			
13	91317–06012	BOLT	1	1	1			
14	90109–105G7	BOLT	2	2	2			
15	5SL–22187–00	GUIDE, CHAIN	1	1	1			
16	90387–073M0	COLLAR	1	1	1			
17	90119–06192	BOLT, WITH WASHER	1	1	1			
18	5SL–27451–00	FOOTREST	1	1	1			
19	5SL–27442–00	BRACKET 2	1	1	1			
20	90508–18134	SPRING, TORSION	1	1	1			
21	90240–08084	PIN, CLEVIS	1	1	1			
22	91401–25015	PIN, COTTER	1	1	1			
23	90109–08018	BOLT	1	1	1			
24	4BP–27434–01	BOLT	1	1	1			
25	90201–08326	WASHER, PLATE	1	1	1			
26	5SL–27445–00	PLATE 1	1	1	1			
27	90149–06233	SCREW	2	2	2			

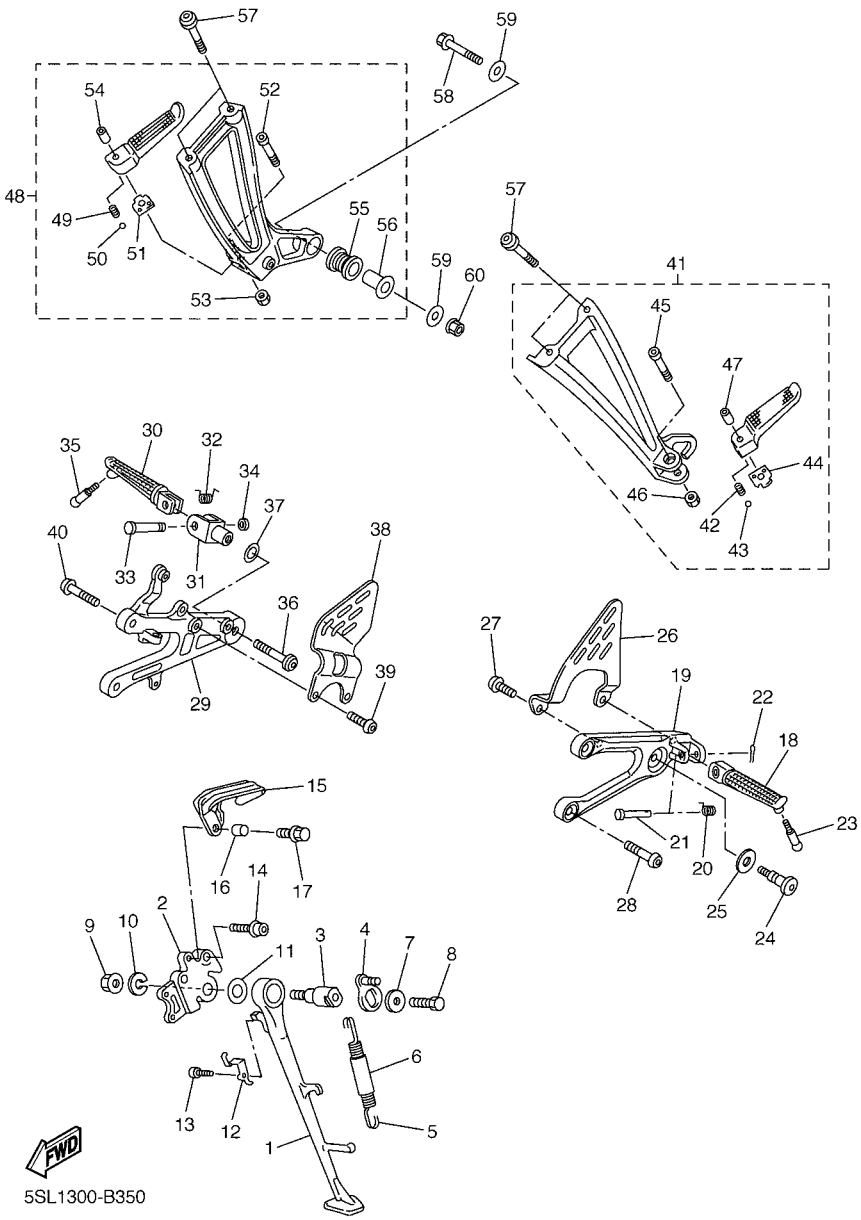

FIG. 35 STAND & FOOTREST

REF. NO.	PART NO.	DESCRIPTION	5SL3	5SL4	5SL5			REMARKS
28	90109–085G6	BOLT	2	2	2			
29	5SL–27443–00	BRACKET 3	1	1	1			
30	5SL–27461–00	FOOTREST	1	1	1			
31	5JJ–27411–01	FOOTREST 1	1	1	1			
32	90508–18135	SPRING, TORSION	1	1	1			
33	90243–08029	PIN	1	1	1			
34	90201–06042	WASHER, PLATE	1	1	1			
35	90109–08018	BOLT	1	1	1			
36	90149–08296	SCREW	1	1	1			
37	90201–13008	WASHER, PLATE	1	1	1			
38	5SL–27446–00	PLATE 2	1	1	1			
39	90149–06233	SCREW	2	2	2			
40	90109–085G6	BOLT	2	2	2			
41	5SL–27430–00	REAR FOOTREST ASSY 1	1	1	1			
42	90501–12743	.SPRING, COMPRESSION	1	1	1			
43	93501–04011	.BALL	1	1	1			
44	5JJ–27437–00	.WASHER, SPECIAL	1	1	1			
45	91314–06035	.BOLT	1	1	1			
46	95604–06200	.NUT, U FLANGE	1	1	1			
47	90387–06697	.COLLAR	1	1	1			
48	5SL–27440–00	REAR FOOTREST ASSY 2	1	1	1			
49	90501–12743	.SPRING, COMPRESSION	1	1	1			
50	93501–04011	.BALL	1	1	1			
51	5JJ–27437–00	.WASHER, SPECIAL	1	1	1			
52	91314–06035	.BOLT	1	1	1			
53	95604–06200	.NUT, U FLANGE	1	1	1			
54	90387–06697	.COLLAR	1	1	1			

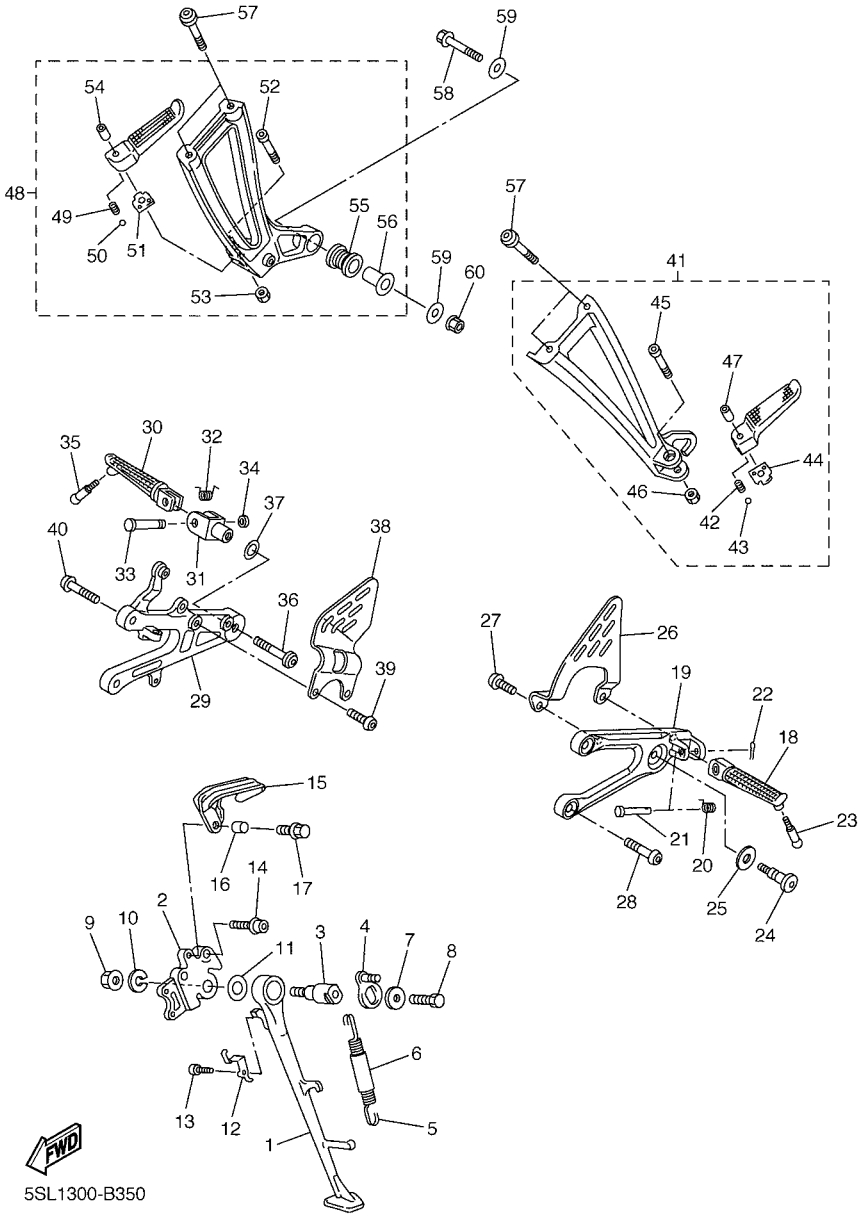

FIG. 35 STAND & FOOTREST

REF. NO.	PART NO.	DESCRIPTION	5SL3	5SL4	5SL5			REMARKS
55	5SL–27424–00	.DAMPER, FOOTREST 2	1	1	1			
56	90387–08020	.COLLAR	1	1	1			
57	90110–08220	BOLT, HEXAGON SOCKET HEAD	4	4	4			
58	90105–08053	BOLT, FLANGE	1	1	1			
59	90201–08034	WASHER, PLATE	2	2	2			
60	95607–08200	NUT, SELF-LOCKING	1	1	1			

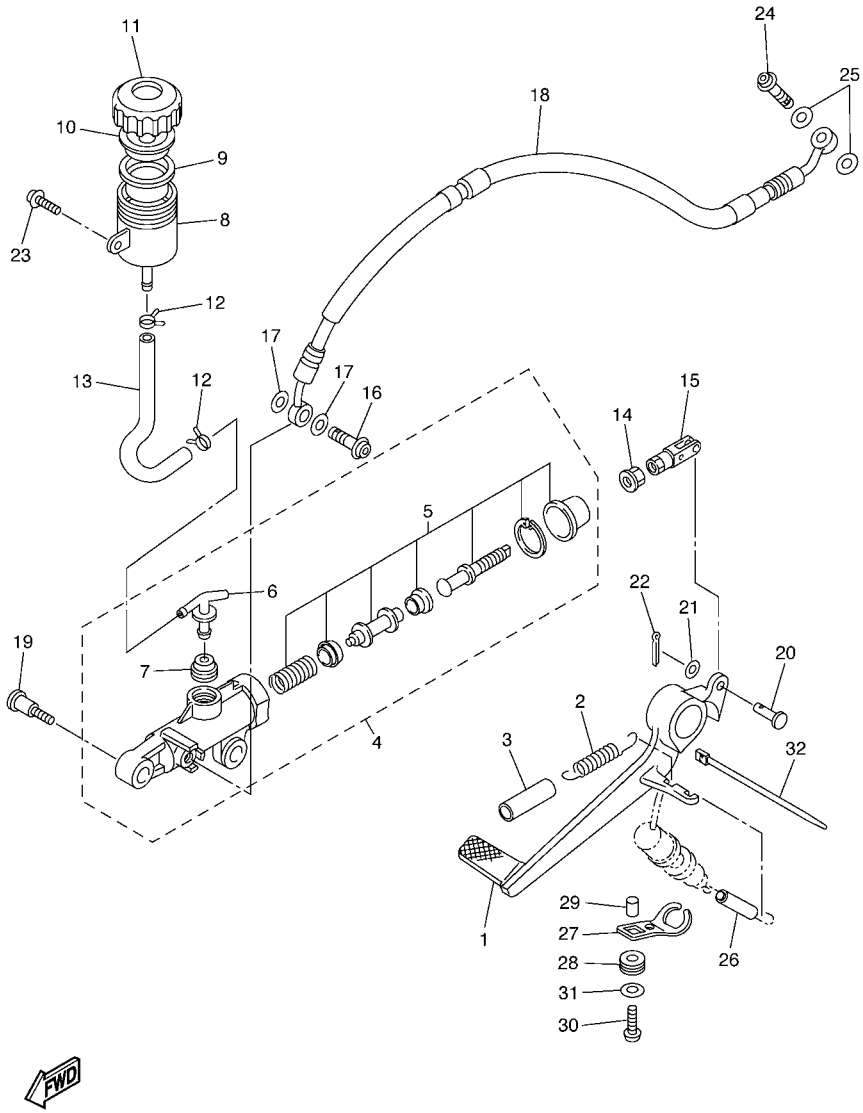

5SL1300-B360

FIG. 36 REAR MASTER CYLINDER

REF. NO.	PART NO.	DESCRIPTION	5SL3	5SL4	5SL5			REMARKS
1	5SL–27211–00	PEDAL, BRAKE	1	1	1			
2	90506–20193	SPRING, TENSION	1	1	1			
3	90446–15386	HOSE	1	1	1			
4	5SL–2583V–00	RR. MASTER CYLINDER ASSY.	1	1	1			
5	3TU–W0042–51	.CYLINDER KIT, MASTER	1	1	1			
6	5SL–2582A–00	.JOINT	1	1	1			
7	4BP–2585F–00	.BUSH	1	1	1			
8	5SL–25894–00	TANK, RESERVOIR	1	1	1			
9	5SL–25854–00	DIAPHRAGM, RESERVOIR	1	1	1			
10	5SL–25855–00	BUSH,DIAPHRAGM	1	1	1			
11	5SL–25852–00	CAP, RESERVOIR	1	1	1			
12	90467–010A0	CLIP	2	2	2			
13	5SL–25895–00	HOSE, RESERVOIR	1	1	1			
14	95307–08700	NUT	1	1	1			
15	5SL–27222–00	JOINT	1	1	1			
16	90401–10172	BOLT, UNION	1	1	1			
17	90201–10118	WASHER, PLATE	2	2	2			
18	5SL–25874–00	HOSE, BRAKE	1	1	1			
19	90109–06013	BOLT	2	2	2			
20	91701–06018	PIN, CLEVIS	1	1	1			
21	92907–06200	WASHER	1	1	1			
22	91401–16012	PIN, COTTER	1	1	1			
23	90159–06056	SCREW, WITH WASHER	1	1	1			
24	90401–10172	BOLT, UNION	1	1	1			
25	90201–10118	WASHER, PLATE	2	2	2			
26	90446–08001	HOSE	1	1	1			
27	5SL–2144G–00	STAY, STOP SWITCH	1	1	1			

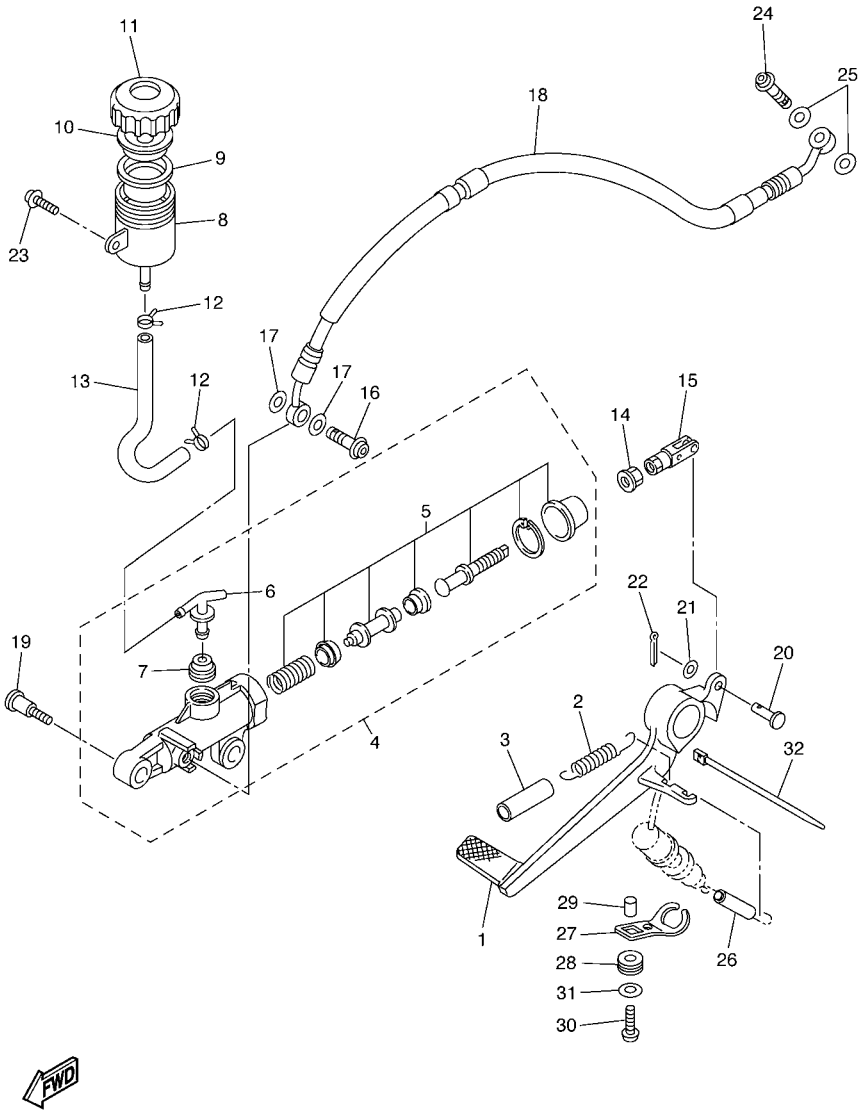

5SL1300-B360

FIG. 36 REAR MASTER CYLINDER

REF. NO.	PART NO.	DESCRIPTION	5SL3	5SL4	5SL5			REMARKS
28	90480–12607	GROMMET	1	1	1			
29	90387–06023	COLLAR	1	1	1			
30	92017–06016	BOLT, BUTTON HEAD	1	1	1			
31	90201–06380	WASHER, PLATE	1	1	1			
32	5Y9–12491–00	CLAMP 1	1	1	1			

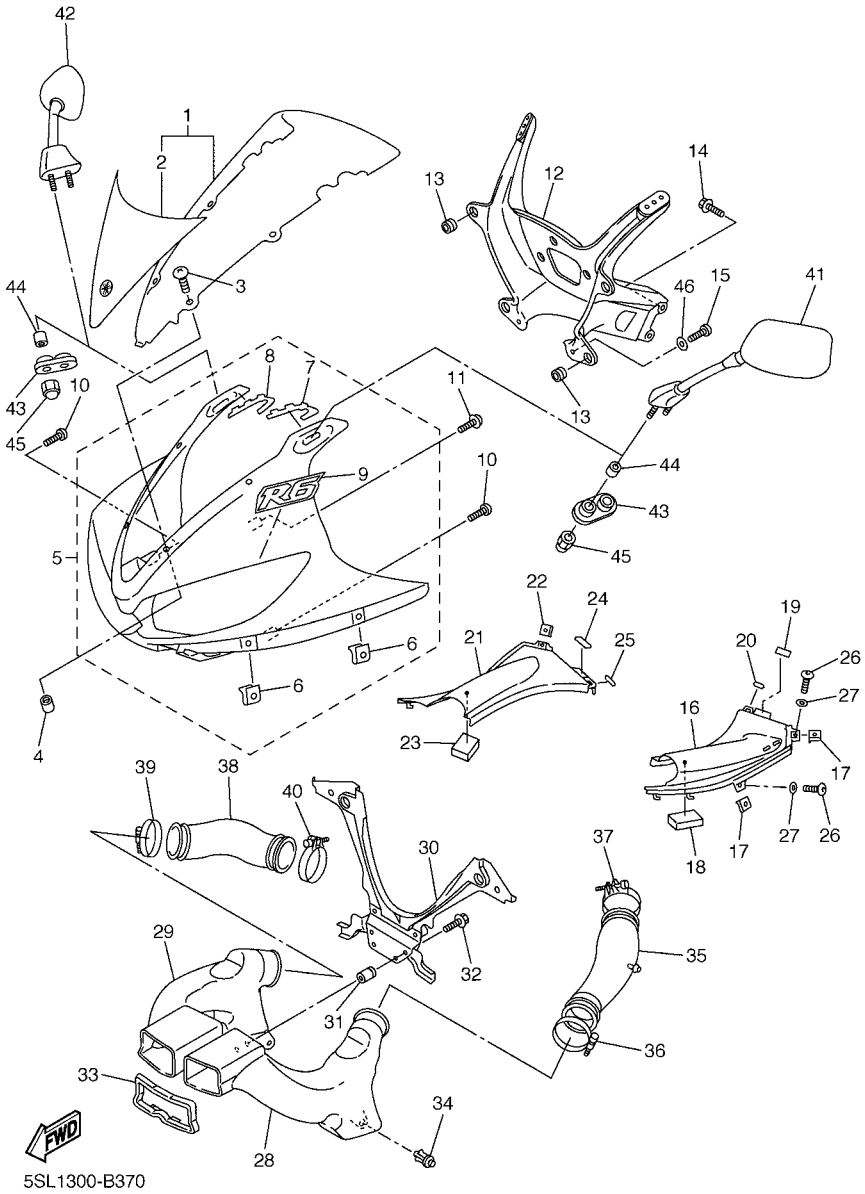

FIG. 37 COWLING 1

REF. NO.	PART NO.	DESCRIPTION	5SL3	5SL4	5SL5			REMARKS
1	5SL–Y2881–10	WINDSHIELD	1	1				
	5SL–Y2881–20	WINDSHIELD			1			
2	5SL–2832P–00	.GRAPHIC 18	1	1	1			
3	90150–05024	SCREW, ROUND HEAD	4	4	4			
4	90179–05523	NUT	4	4	4			
5	5SL–Y283G–40–P1	BODY, FRONT UPPER 1	1	1	1			UR DPBMC
	5SL–Y283G–20–P2	BODY, FRONT UPPER 1	1	1	1			UR S3
6	90183–05024	.NUT, SPRING	4	4	4			
7	5SL–28428–00	.SEAL 1	1	1	1			
8	5SL–28429–00	.SEAL 2	1	1	1			
9	5SL–28315–30	.EMBLEM	1	1	1			UR FOR DPBMC
	5SL–28315–20	.EMBLEM	1	1	1			UR FOR S3
10	97707–50016	SCREW, TAPPING	3	3	3			
11	90160–05007	SCREW, ROUND TAPPING	2	2	2			
12	5SL–28356–00	STAY 1	1	1	1			
13	4XV–83513–00	DAMPER	7	7	7			
14	90105–08052	BOLT, FLANGE	2	2	2			
15	90167–05078	SCREW, TAPPING	2	2	2			
16	5SL–2837L–01	PANEL, CONSOLE 1	1	1	1			
17	90183–05061	NUT, SPRING	2	2	2			
18	4XY–21649–00	DAMPER	1	1	1			
19	1FK–84527–00	DAMPER	1	1	1			
20	5SL–28416–00	DAMPER 2	1	1	1			
21	5SL–2837M–01	PANEL, CONSOLE 2	1	1	1			
22	90183–05061	NUT, SPRING	2	2	2			
23	4XY–21649–00	DAMPER	1	1	1			
24	1FK–84527–00	DAMPER	1	1	1			

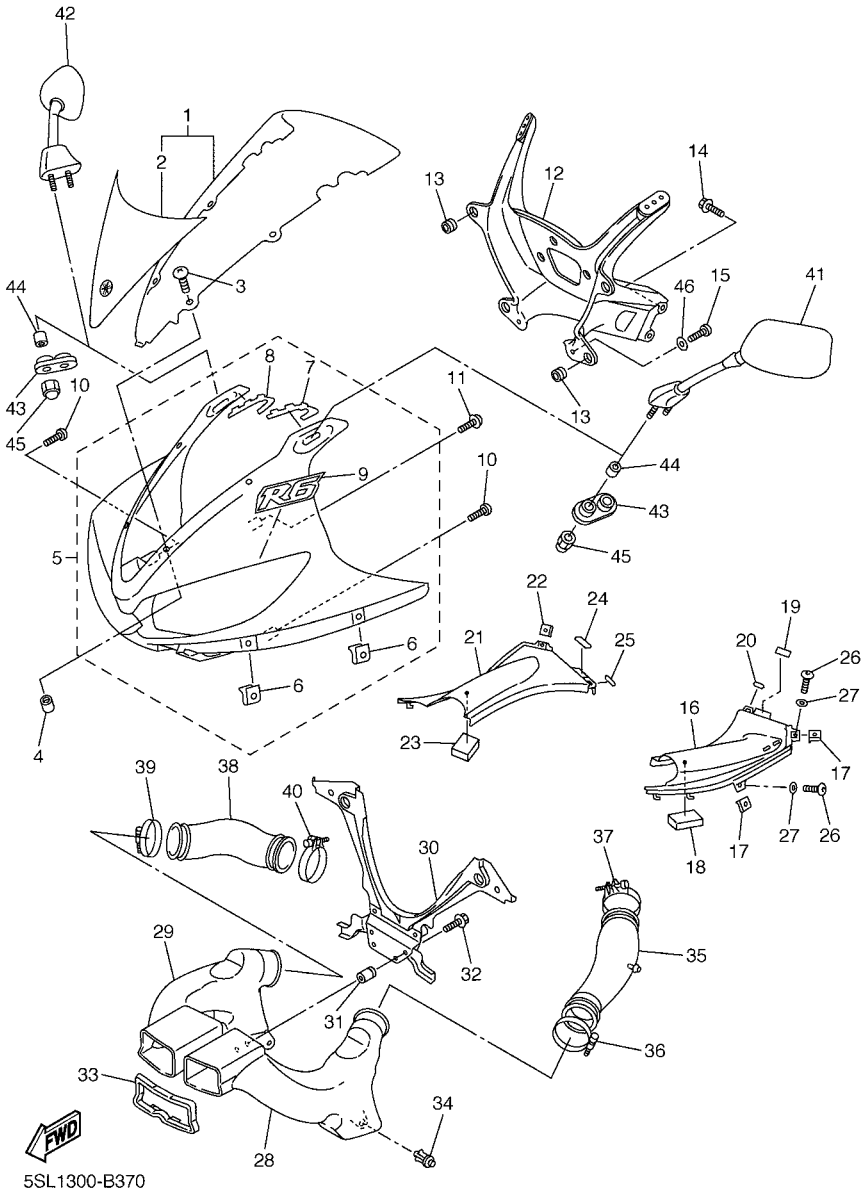

FIG. 37 COWLING 1

REF. NO.	PART NO.	DESCRIPTION	5SL3	5SL4	5SL5			REMARKS
25	5SL–28416–00	DAMPER 2	1	1	1			
26	90111–05003	BOLT	4	4	4			
27	90202–05180	WASHER, PLATE	4	4	4			
28	5SL–2838R–00	DUCT 2	1	1	1			
29	5SL–2838T–00	DUCT 3	1	1	1			
30	5SL–2838E–00	COVER, HEADLIGHT	1	1	1			
31	90179–05523	NUT	4	4	4			
32	90119–05001	BOLT, WITH WASHER	4	4	4			
33	5SL–28371–00	DAMPER	1	1	1			
34	90269–06008	RIVET	2	2	2			
35	5EB–1446F–00	JOINT, SURGE TANK 1	1	1	1			
36	4TV–13575–00	BAND	1	1	1			
37	90460–59211	CLAMP, HOSE	1	1	1			
38	5EB–1446F–00	JOINT, SURGE TANK 1	1	1	1			
39	4TV–13575–00	BAND	1	1	1			
40	90460–59211	CLAMP, HOSE	1	1	1			
41	5SL–26280–00	REAR VIEW MIRROR ASSY (LEFT)	1	1	1			
42	5SL–26290–00	REAR VIEW MIRROR ASSY (RIGHT)	1	1	1			
43	5SL–26298–00	PLATE, MIRROR FITTING 1	2	2	2			
44	90387–06057	COLLAR	4	4	4			
45	90176–06008	NUT, CROWN	4	4	4			
46	90202–05088	WASHER, PLATE	2	2	2			

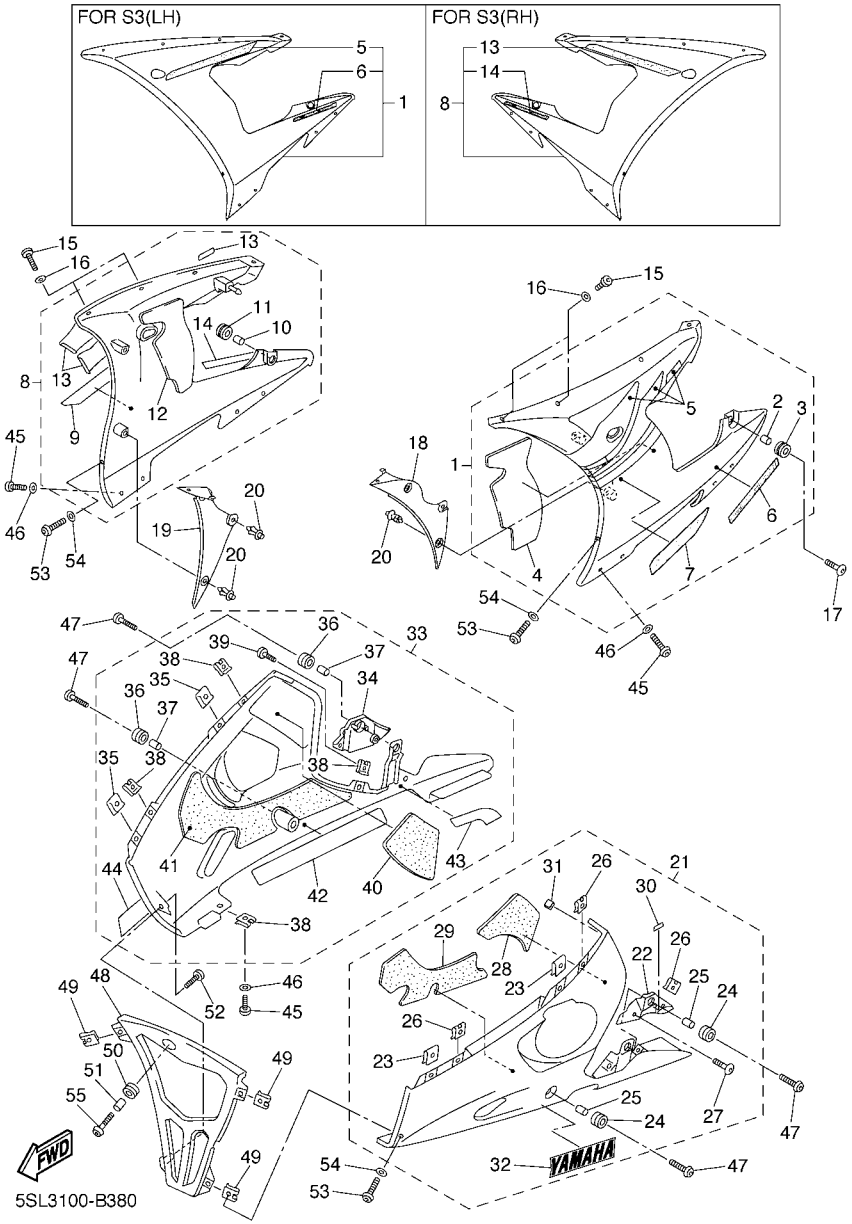

FIG. 38 COWLING 2

REF. NO.	PART NO.	DESCRIPTION	5SL3	5SL4	5SL5			REMARKS
1	5SL–Y283U–50–P1	PANEL ASSEMBLY 1	1	1	1			UR DPBMC
	5SL–Y283U–60–P0	PANEL ASSEMBLY 1	1	1	1			UR MBL2 FOR S3
2	90387–06057	.COLLAR	1	1	1			
3	90480–14003	.GROMMET	1	1	1			
4	5SL–2836T–00	.DAMPER, LOCATING 1	1	1	1			
5	5SL–28301–20	.GRAPHIC SET, LOWER COVER 1	1	1	1			UR FOR DPBMC
	5SL–28368–01	.EMBLEM	1	1	1			UR FOR S3
6	5SL–28328–30	.EMBLEM	1	1	1			UR FOR DPBMC
	5SL–28328–41	.EMBLEM	1	1	1			UR FOR S3
7	5PW–2839H–00	.EMBLEM 1	1	1	1			FOR DPBMC
8	5SL–Y283V–50–P1	PANEL ASSEMBLY 2	1	1	1			UR DPBMC
	5SL–Y283V–60–P0	PANEL ASSEMBLY 2	1	1	1			UR MBL2 FOR S3
9	5PW–2839H–00	.EMBLEM 1	1	1	1			FOR DPBMC
10	90387–06057	.COLLAR	1	1	1			
11	90480–14003	.GROMMET	1	1	1			
12	5SL–2836U–00	.DAMPER, LOCATING 2	1	1	1			
13	5SL–28303–20	.GRAPHIC SET, LOWER COVER 2	1	1	1			UR FOR DPBMC
	5SL–28368–01	.EMBLEM	1	1	1			UR FOR S3
14	5SL–28328–30	.EMBLEM	1	1	1			UR FOR DPBMC
	5SL–28328–41	.EMBLEM	1	1	1			UR FOR S3
15	90111–05003	BOLT	4	4	4			
16	90202–05180	WASHER, PLATE	4	4	4			
17	90111–06040	BOLT	2	2	2			
18	5SL–2836K–00	PANEL, INNER 1	1	1	1			
19	5SL–2836L–00	PANEL, INNER 2	1	1	1			
20	90269–06008	RIVET	6	6	6			
21	5SL–Y2808–00–P0	COVER ASSY, UNDER	1	1	1			UR DPBMC

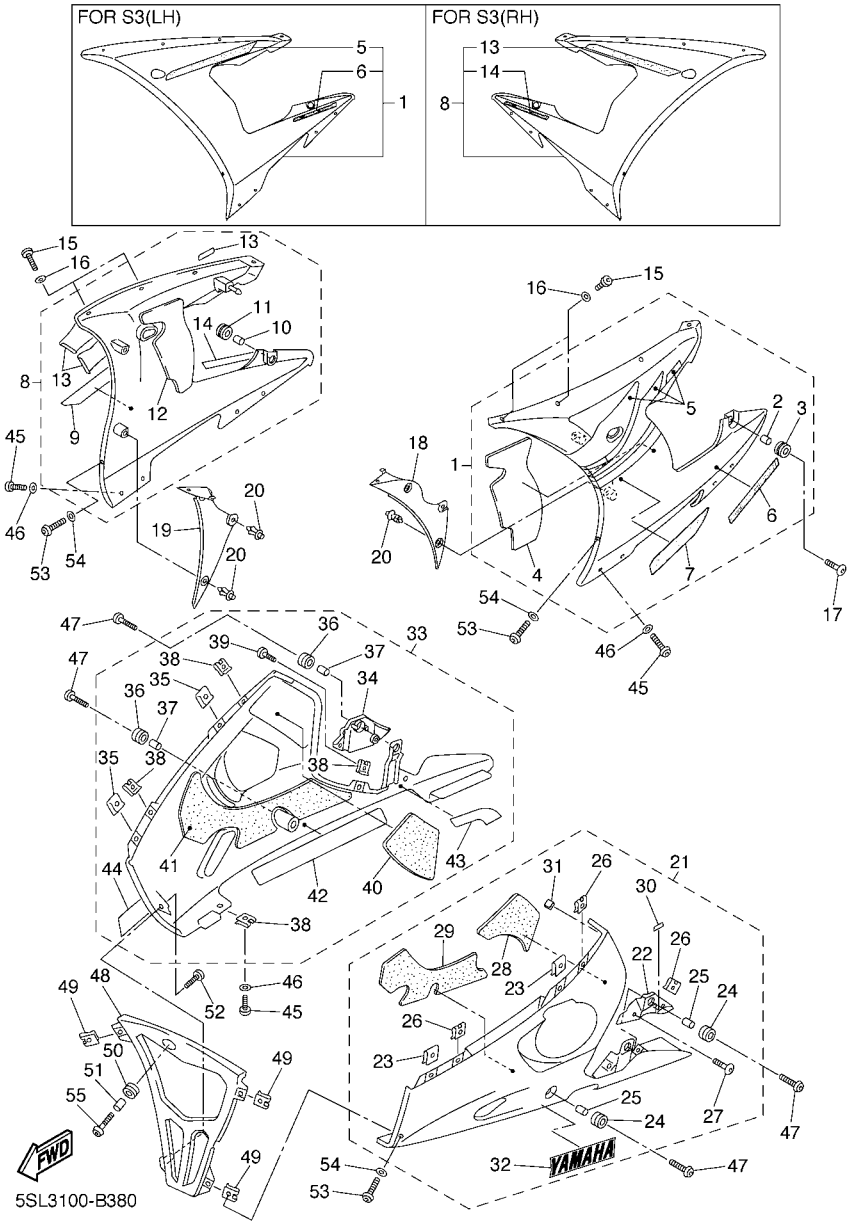

FIG. 38 COWLING 2

REF. NO.	PART NO.	DESCRIPTION	5SL3	5SL4	5SL5			REMARKS
21	5SL–Y2808–20–P2	COVER ASSY, UNDER	1	1	1			UR S3
22	5SL–2843J–00	.COVER 3	1	1	1			
23	90183–05024	.NUT, SPRING	2	2	2			
24	90480–14003	.GROMMET	2	2	2			
25	90387–06057	.COLLAR	2	2	2			
26	90183–05061	.NUT, SPRING	5	5	5			
27	90111–05002	.BOLT	2	2	2			
28	5SL–2834E–00	.DAMPER 1	1	1	1			
29	5SL–2837J–00	.DAMPER 5	1	1	1			
30	1HX–27415–00	.PLATE, DAMPER	1	1	1			
31	5SL–21649–00	.DAMPER	1	1	1			
32	99241–00280	.EMBLEM, YAMAHA	1	1	1			UR FOR DPBMC
	99247–00280	.EMBLEM, YAMAHA	1	1	1			UR FOR S3
33	5SL–Y2809–00–P0	COVER ASSY 2, UNDER	1	1	1			UR DPBMC
	5SL–Y2809–20–P2	COVER ASSY 2, UNDER	1	1	1			UR S3
34	5SL–2844J–00	.COVER 4	1	1	1			
35	90183–05024	.NUT, SPRING	2	2	2			
36	90480–14003	.GROMMET	2	2	2			
37	90387–06057	.COLLAR	2	2	2			
38	90183–05061	.NUT, SPRING	4	4	4			
39	90111–05002	.BOLT	2	2	2			
40	5SL–2834F–00	.DAMPER	1	1	1			
41	5SL–2837K–00	.DAMPER 6	1	1	1			
42	5SL–2838G–00	.SEAT 1	1	1	1			
43	5SL–2848K–00	.SEAT 2	1	1	1			
44	99241–00280	.EMBLEM, YAMAHA	1	1	1			UR FOR DPBMC
	99247–00280	.EMBLEM, YAMAHA	1	1	1			UR FOR S3

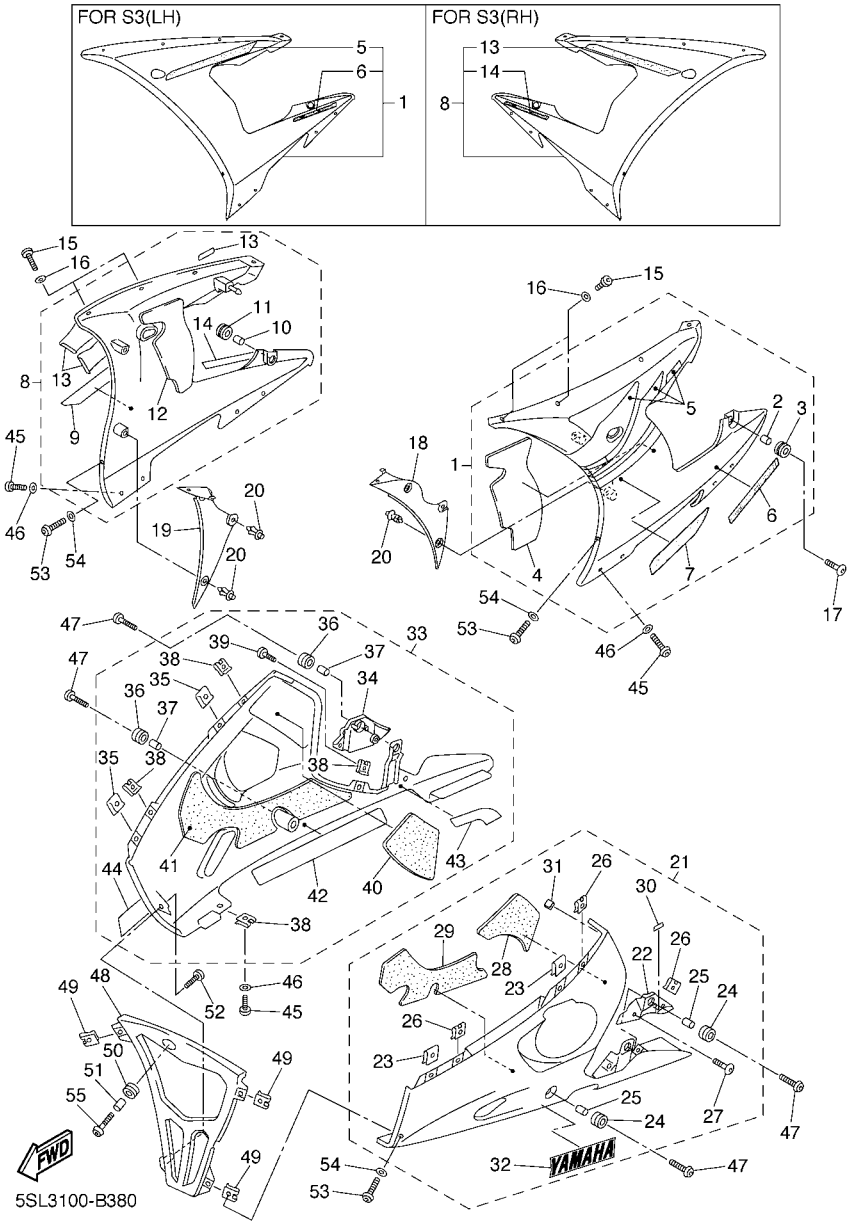

FIG. 38 COWLING 2

REF. NO.	PART NO.	DESCRIPTION	5SL3	5SL4	5SL5			REMARKS
45	90111–05003	BOLT	9	9	9			
46	90202–05180	WASHER, PLATE	9	9	9			
47	90111–06040	BOLT	4	4	4			
48	5SL–2836M–00	PANEL, INNER 3	1	1	1			
49	90183–05061	NUT, SPRING	3	3	3			
50	90480–14003	GROMMET	1	1	1			
51	90387–06057	COLLAR	1	1	1			
52	97707–50016	SCREW, TAPPING	1	1	1			
53	90111–05003	BOLT	3	3	3			
54	90202–05180	WASHER, PLATE	3	3	3			
55	90111–06040	BOLT	1	1	1			

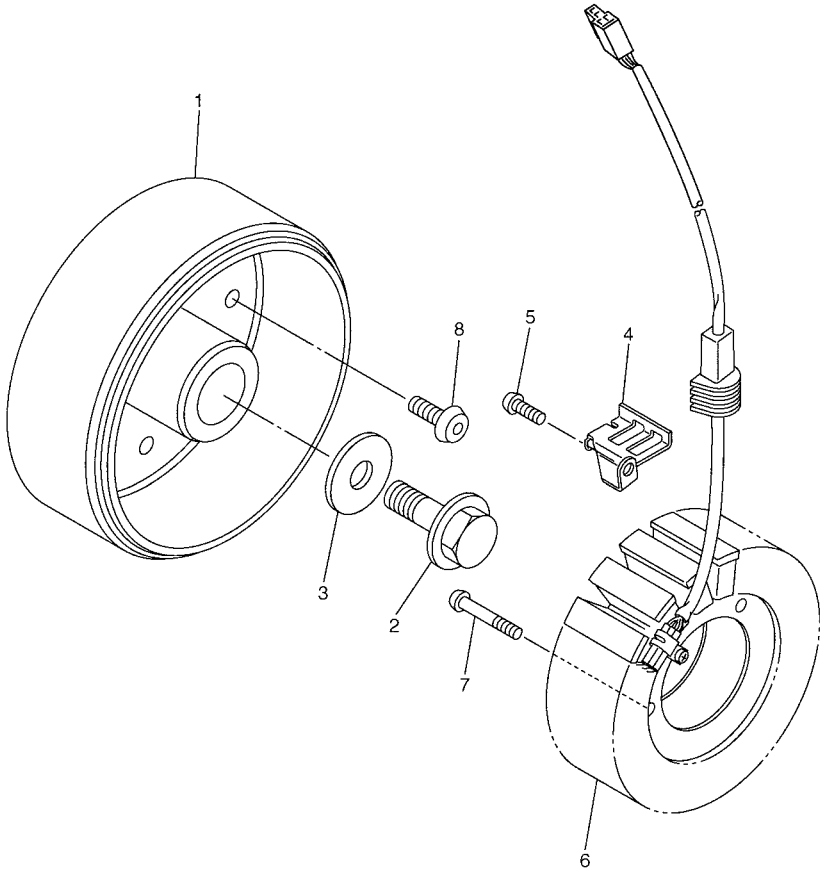

5SL1300-B390

FIG. 39 GENERATOR

REF. NO.	PART NO.	DESCRIPTION	5SL3	5SL4	5SL5			REMARKS
1	5SL–81450–00	ROTOR ASSY	1	1	1			
2	90105–126A8	BOLT, FLANGE	1	1	1			
3	90201–12008	WASHER, PLATE	1	1	1			
4	5SL–15484–00	CLAMP 2	1	1	1			
5	90149–06250	SCREW	1	1	1			
6	5SL–81410–00	STATOR ASSY	1	1	1			
7	90149–06031	SCREW	3	3	3			
8	90149–08003	SCREW	3	3	3			

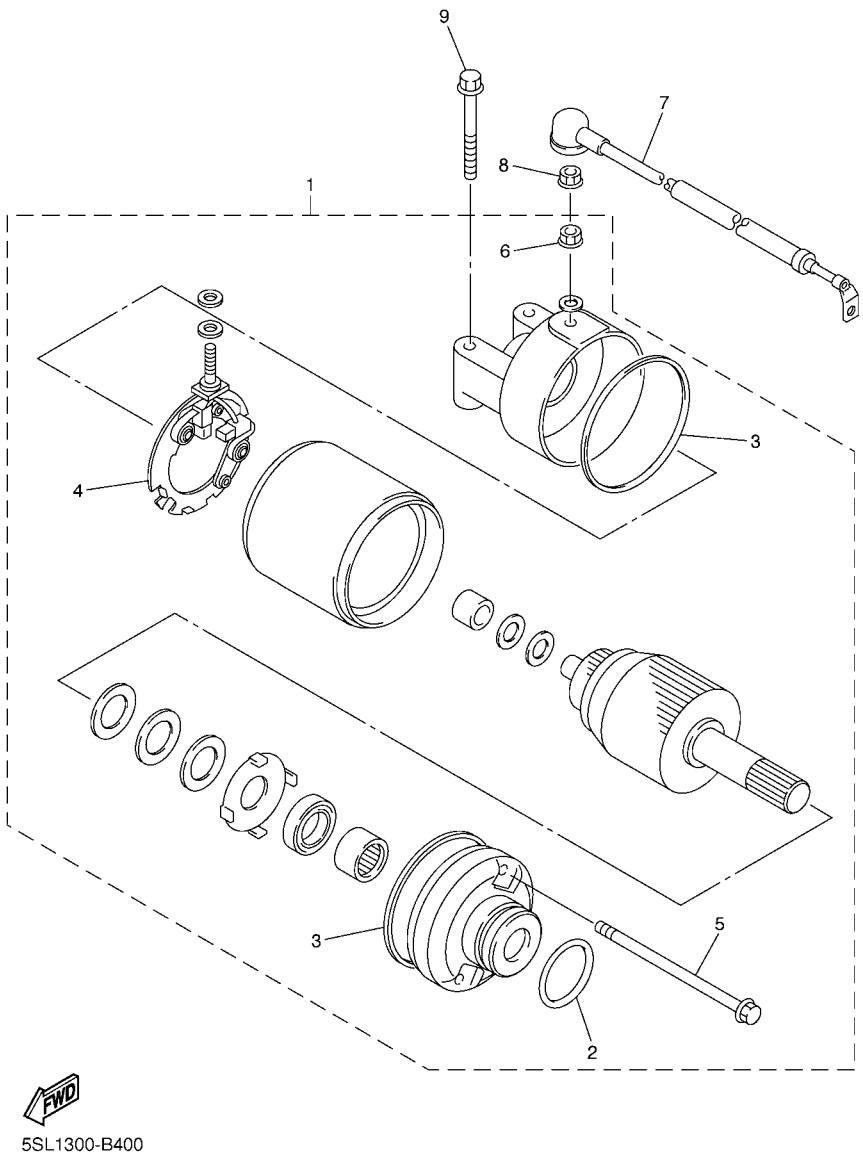

FIG. 40 STARTING MOTOR

REF. NO.	PART NO.	DESCRIPTION	5SL3	5SL4	5SL5			REMARKS
1	5EB–81890–00	MOTOR ASSY	1	1	1			
2	1FK–81847–00	.O-RING	1	1	1			
3	4WP–81844–00	.GASKET	2	2	2			
4	4WP–81801–00	.BRUSH SET	1	1	1			
5	4WP–81826–00	.BOLT	2	2	2			
6	4XV–8182A–00	.NUT	1	1	1			
7	5SL–8183G–00	CORD COMP.	1	1	1			
8	4XV–8182A–00	NUT	1	1	1			
9	95027–06040	BOLT, FLANGE	2	2	2			

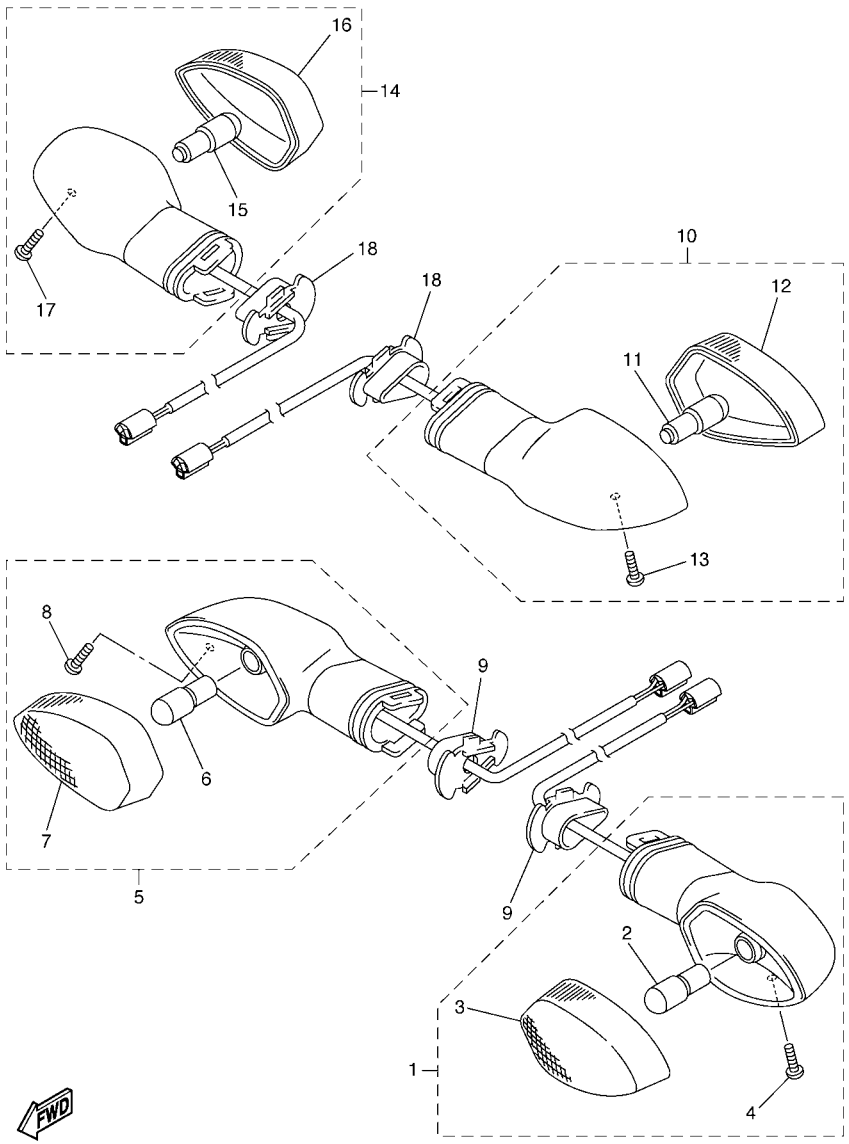

FIG. 41 FLASHER LIGHT

REF. NO.	PART NO.	DESCRIPTION	5SL3	5SL4	5SL5			REMARKS
1	5PW–83310–10	FRONT FLASHER LIGHT ASSY 1	1	1	1			
2	5GJ–83331–00	.BULB, FLASHER(12V-21/5W T20)	1	1	1			
3	5PW–8333A–10	.LENS COMP	1	1	1			
4	97706–04012	.SCREW, TAPPING	1	1	1			
5	5PW–83320–10	FRONT FLASHER LIGHT ASSY 2	1	1	1			
6	5GJ–83331–00	.BULB, FLASHER(12V-21/5W T20)	1	1	1			
7	5PW–8334A–10	.LENS COMP	1	1	1			
8	97706–04012	.SCREW, TAPPING	1	1	1			
9	5PW–83318–00	STAY, FLASHER 1	2	2	2			
10	5PW–83330–10	REAR FLASHER LIGHT ASSY 1	1	1	1			
11	5PW–83331–00	.BULB (12V-21/5W T20)	1	1	1			
12	5PW–8334A–10	.LENS COMP	1	1	1			
13	97706–04012	.SCREW, TAPPING	1	1	1			
14	5PW–83340–10	FLASHER LIGHT ASSY 2	1	1	1			
15	5PW–83331–00	.BULB (12V-21/5W T20)	1	1	1			
16	5PW–8333A–10	.LENS COMP	1	1	1			
17	97706–04012	.SCREW, TAPPING	1	1	1			
18	5PW–83318–00	STAY, FLASHER 1	2	2	2			

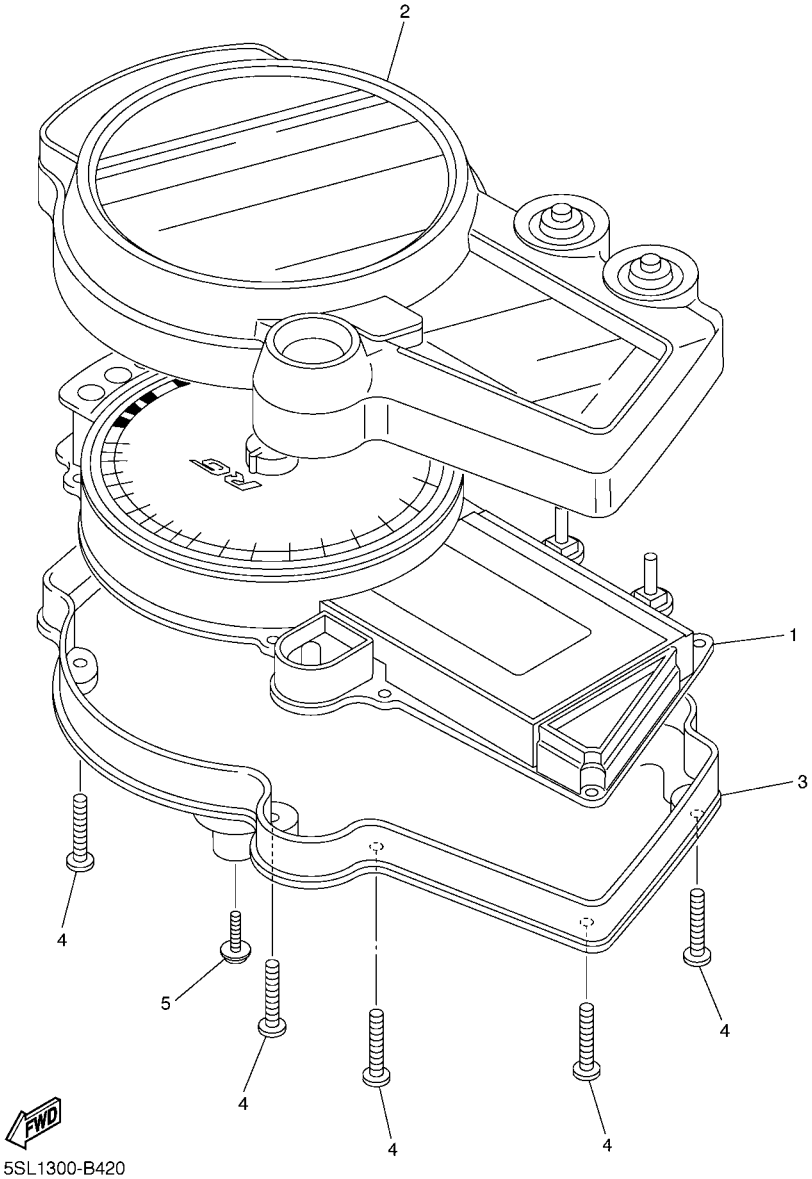

FIG. 42 METER

REF. NO.	PART NO.	DESCRIPTION	5SL3	5SL4	5SL5			REMARKS
1	5SL–83570–20	SPEEDOMETER ASSY (MPH)	1	1				
	5SL–83570–30	SPEEDOMETER ASSY (KM/H)			1			
2	5PW–8353E–00	CASE, METER UPPER	1	1	1			
3	5PW–83572–00	CASE, SPEEDOMETER LOWER	1	1	1			
4	5PW–8352S–00	SCREW, PANEL FTTING	8	8	8			
5	90164–05014	SCREW, TAPPING	3	3	3			

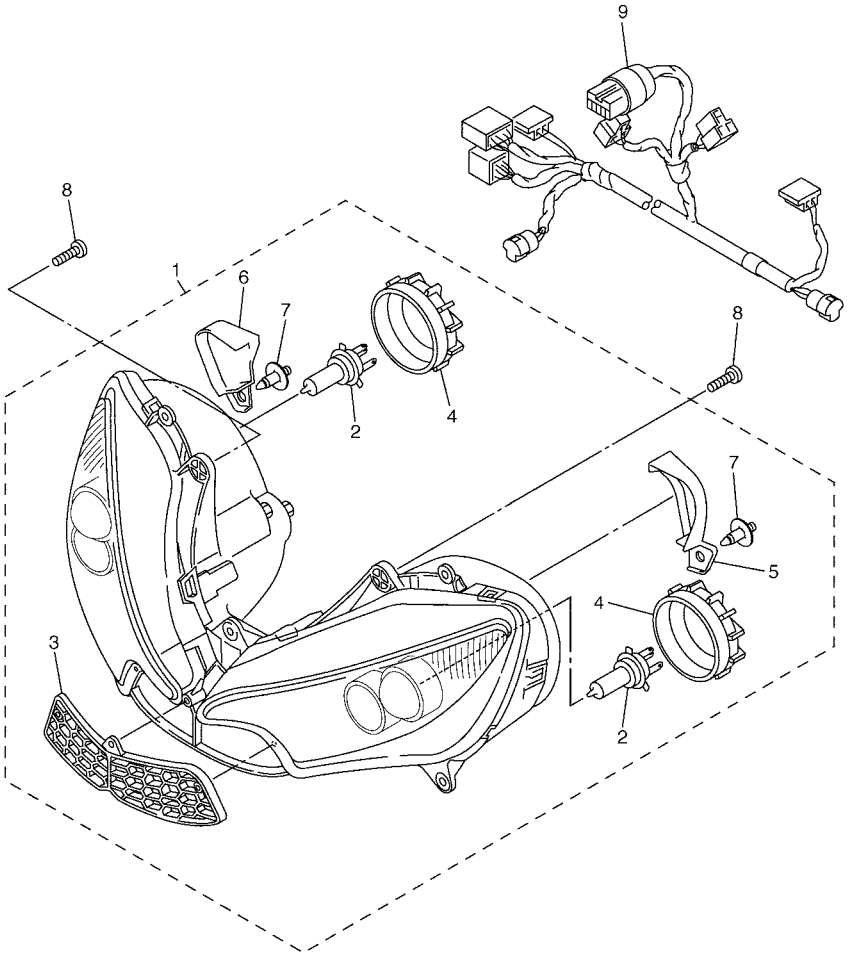

5SL3100-B431

FIG. 43 HEADLIGHT

REF. NO.	PART NO.	DESCRIPTION	5SL3	5SL4	5SL5			REMARKS
1	5SL–84300–20	HEADLIGHT ASSY	1	1	1			
2	4SV–84314–00	.BULB (12V-55W)	2	2	2			(H7)HALOGEN
3	5SL–2837N–00	.GRILL, AIR INTAKE 1	1	1	1			
4	5SL–84397–00	.COVER, SOCKET	2	2	2			
5	5SL–84196–00	.COVER (L.H)	1	1	1			
6	5SL–84396–00	.COVER (R.H)	1	1	1			
7	90269–06008	.RIVET	2	2	2			
8	90160–05006	SCREW, ROUND TAPPING	4	4	4			
9	5SL–84359–10	CORD, HEADLIGHT	1	1	1			

FIG. 44 TAILLIGHT

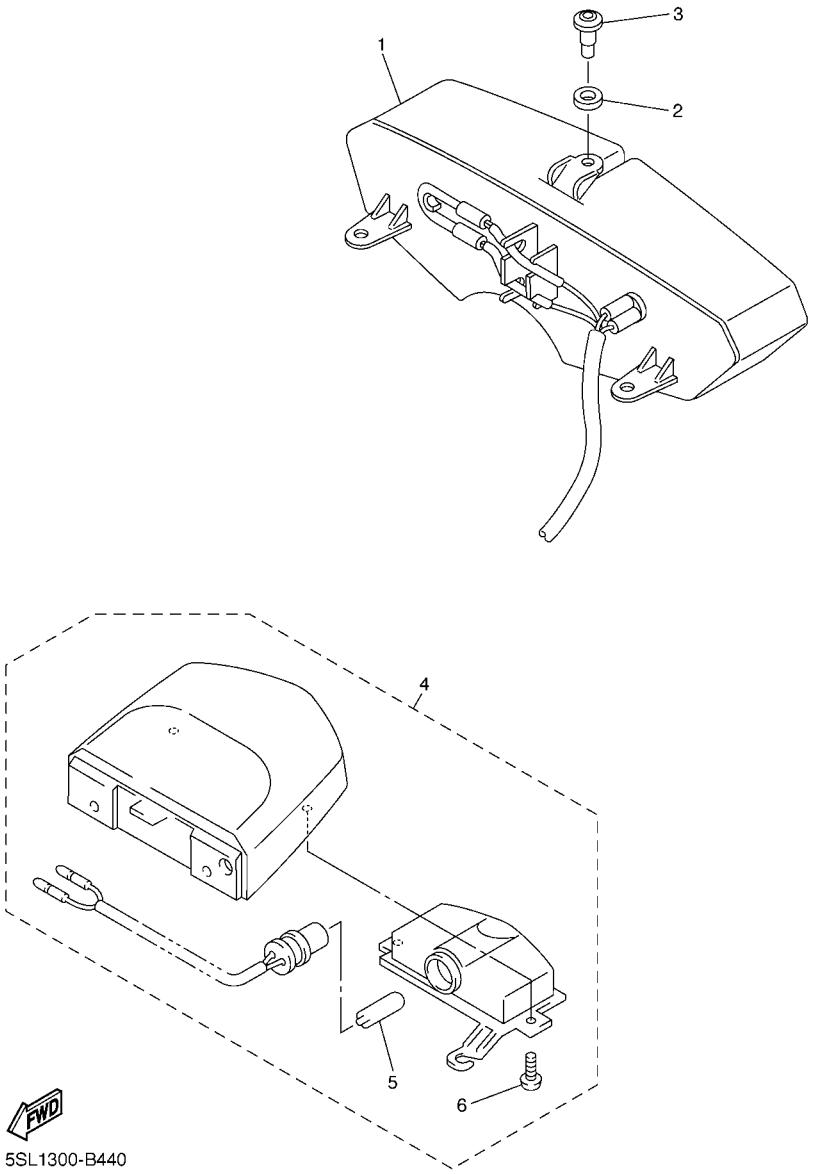

REF. NO.	PART NO.	DESCRIPTION	5SL3	5SL4	5SL5			REMARKS
1	5SL–84710–10	TAILLIGHT UNIT ASSY	1	1	1			
2	5SL–84753–00	DAMPER	3	3	3			
3	90269–06001	RIVET	3	3	3			
4	5PW–84745–01	LICENCE LIGHT UNIT ASSY	1	1	1			
5	4HC–84744–00	.BULB (12V-5W)	1	1	1			
6	97706–04012	.SCREW, TAPPING	2	2	2			

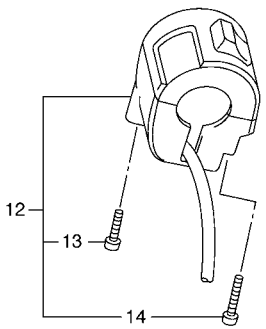

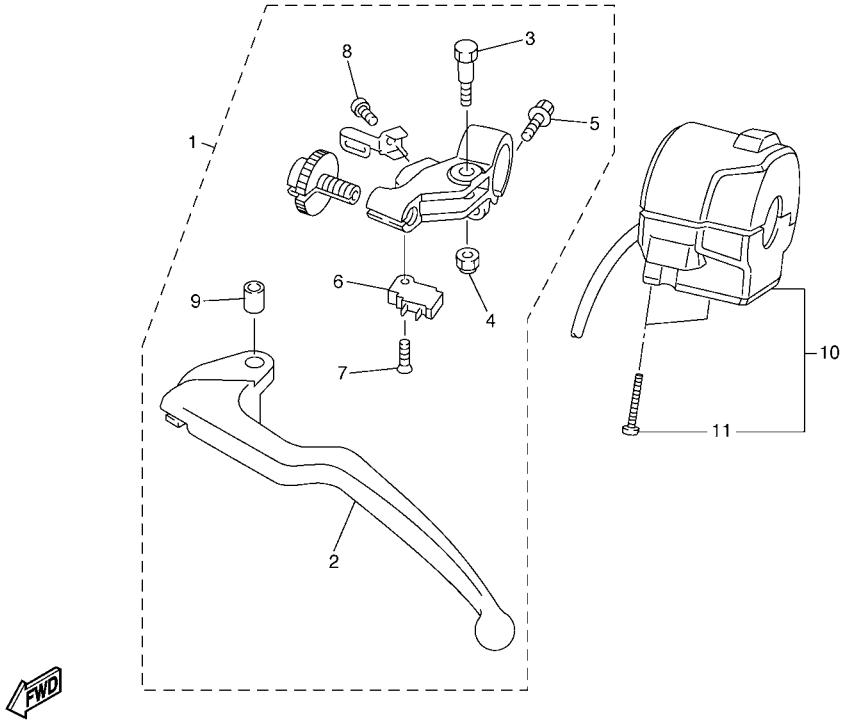

5SL3100-B450

FIG. 45 HANDLE SWITCH & LEVER

REF. NO.	PART NO.	DESCRIPTION	5SL3	5SL4	5SL5			REMARKS
1	5EB–82910–03	LEVER HOLDER ASSY (LEFT)	1	1	1			
2	5EB–83912–01	.LEVER 1	1	1	1			
3	4XV–83945–00	.BOLT, LEVER	1	1	1			
4	95607–06100	.NUT, U	1	1	1			
5	95027–06020	.BOLT, FLANGE	1	1	1			
6	4XV–82917–01	.SWITCH	1	1	1			
7	98707–03016	.SCREW, FLAT HEAD	1	1	1			
8	98507–04010	.SCREW, PAN HEAD	1	1	1			
9	4XV–83913–00	.COLLAR, LEVER 1	1	1	1			
10	5SL–83973–00	SWITCH, HANDLE 3	1	1	1			
11	98507–05025	.SCREW, PAN HEAD	2	2	2			
12	5SL–83975–00	SWITCH, HANDLE 2	1	1	1			
13	98507–05025	.SCREW, PAN HEAD	1	1	1			
14	98507–05030	.SCREW, PAN HEAD	1	1	1			

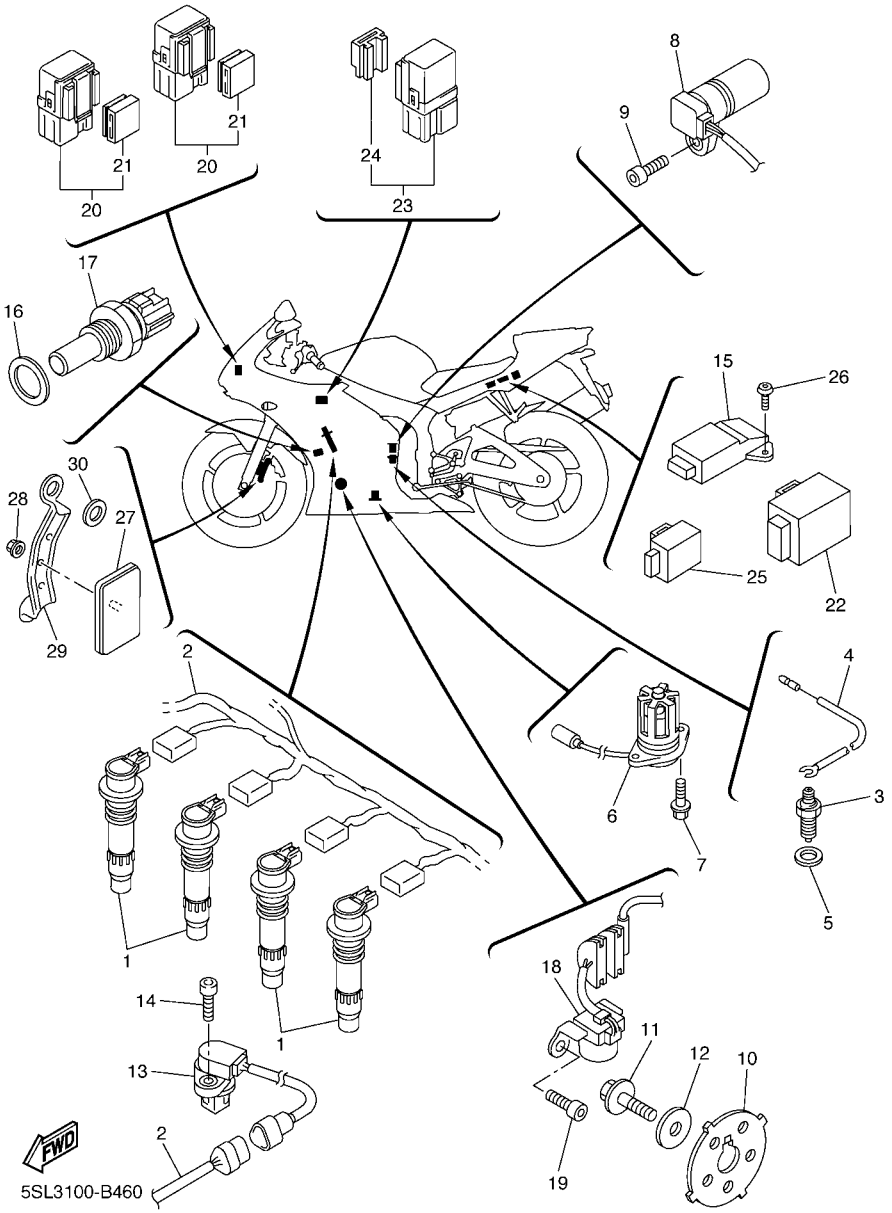

FIG. 46 ELECTRICAL 1

REF. NO.	PART NO.	DESCRIPTION	5SL3	5SL4	5SL5			REMARKS
1	5SL–82310–00	IGNITION COIL ASSY	4	4				
	5SL–82310–20	IGNITION COIL ASSY			4			
2	5SL–82309–00	WIRE, SUB LEAD	1	1				
	5SL–82309–10	WIRE, SUB LEAD			1			
3	3GB–82540–01	NEUTRAL SWITCH ASSY	1	1	1			
4	5MT–82541–00	WIRE, LEAD	1	1	1			
5	90430–10148	GASKET	1	1	1			
6	5SL–85720–00	OIL LEVEL GAUGE ASSY	1	1	1			
7	95027–06016	BOLT, FLANGE	2	2	2			
8	5EB–83755–00	SENSOR, SPEED	1	1	1			
9	91317–06016	BOLT	1	1	1			
10	5SL–81673–00	ROTOR	1	1	1			
11	90105–08386	BOLT, FLANGE	1	1	1			
12	90201–08753	WASHER, PLATE	1	1	1			
13	5PW–85896–01	SENSOR, CAM POSITION	1	1	1			
14	90110–06072	BOLT, HEXAGON SOCKET HEAD	1	1	1			
15	5JW–82380–00	SENSOR, PRESSURE	1	1	1			
16	90201–12790	WASHER, PLATE	1	1	1			
17	8CC–85790–01	THERMOSENSOR ASSY	1	1	1			
18	5SL–81670–00	PICK-UP ASSY	1	1	1			
19	91317–06016	BOLT	2	2	2			
20	5JJ–81950–20	RELAY ASSY	2	2	2			
21	5JJ–81952–00	.HOLDER, RELAY	1	1	1			
22	5PW–81950–00	RELAY ASSY	1	1	1			
23	5EA–81950–20	RELAY ASSY	1	1	1			
24	5EA–81952–00	.HOLDER, RELAY	1	1	1			
25	4MY–83350–01	FLASHER RELAY ASSY	1	1	1			

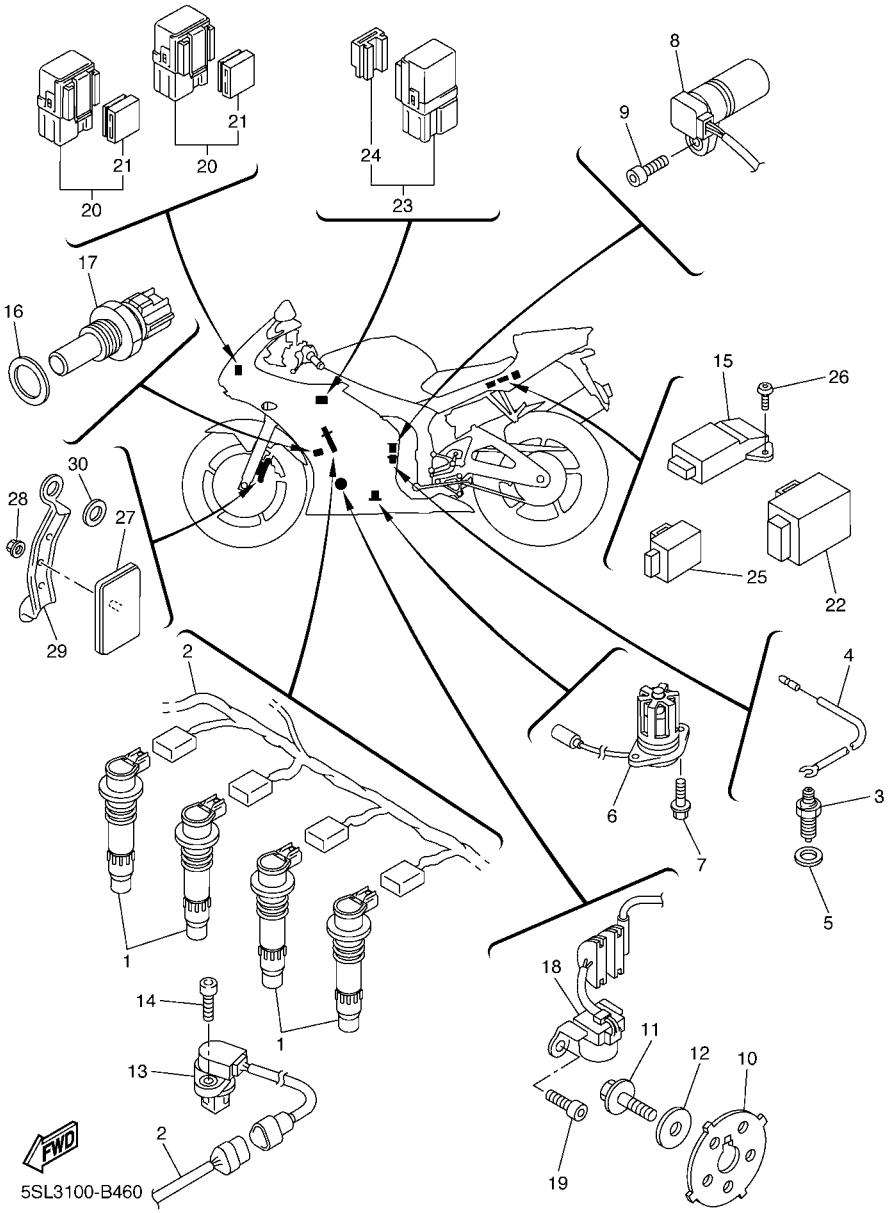

FIG. 46 ELECTRICAL 1

REF. NO.	PART NO.	DESCRIPTION	5SL3	5SL4	5SL5			REMARKS
26	92017–05016	BOLT, BUTTON HEAD	1	1	1			
27	20G–85110–00	REFLECTOR ASSY	2	2	2			
28	95707–05500	NUT, FLANGE	2	2	2			
29	5SL–85112–00	BRACKET, REFLECTOR 1	2	2	2			
30	90201–08759	WASHER, PLATE	4	4	4			

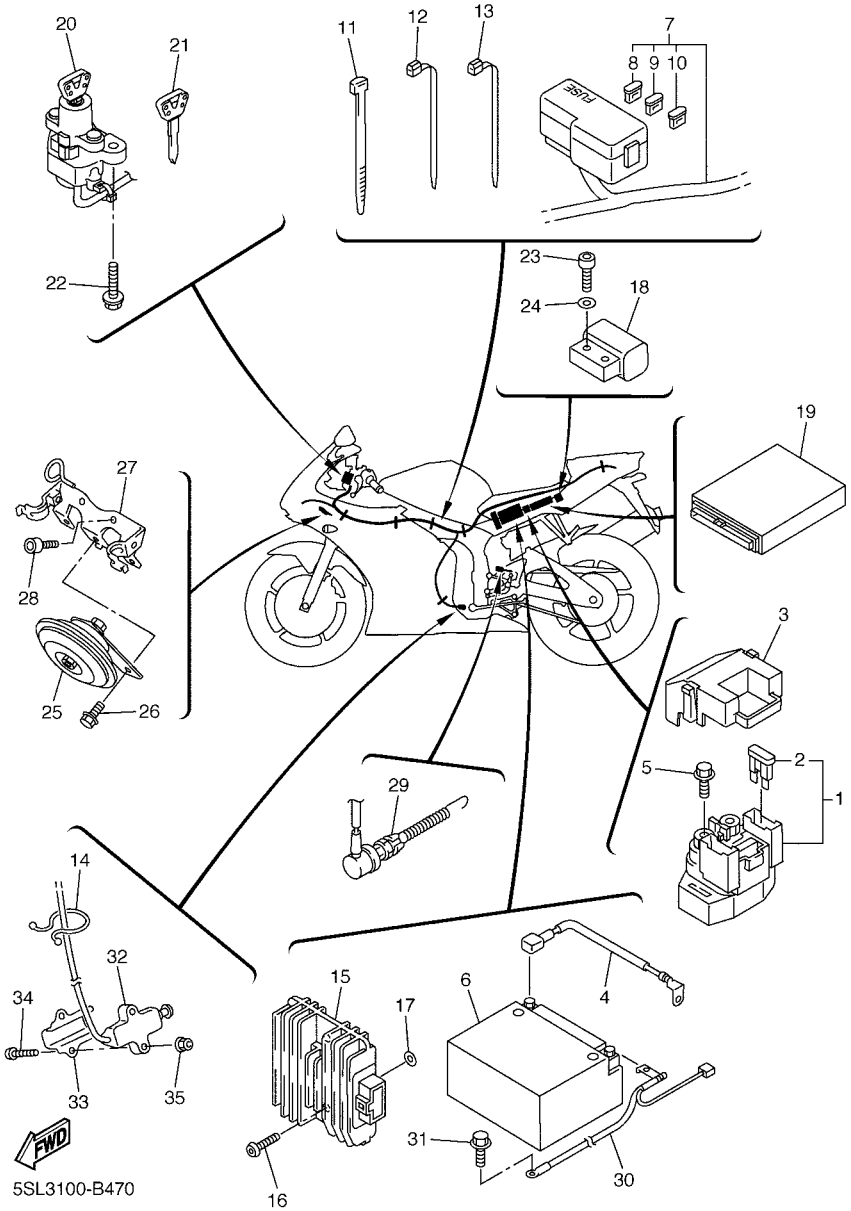

FIG. 47 ELECTRICAL 2

REF. NO.	PART NO.	DESCRIPTION	5SL3	5SL4	5SL5			REMARKS
1	5SL–81940–10	STARTER RELAY ASSY	1	1	1			
2	5EA–82151–00	.FUSE (40A-BL)	2	2	2			
3	5SL–82119–10	COVER, LEAD WIRE	1	1	1			
4	5SL–82115–00	WIRE, PLUS LEAD	1	1	1			
5	95027–06008	BOLT, FLANGE	2	2	2			
6	5FL–82100–01	BATTERY ASSY (GT9B-4)	1	1	1			
7	5SL–82590–10	WIRE HARNESS ASSY	1	1	1			
8	5JJ–82151–10	.FUSE (15A-BL)	5	5	5			
9	5JJ–82151–20	.FUSE (20A-BL)	2	2	2			
10	5JJ–82151–30	.FUSE (10A-BL)	2	2	2			
11	90464–15195	CLAMP	1	1	1			
12	3MA–82591–00	BAND	2	2	2			
13	90464–13077	CLAMP	1	1	1			
14	90465–18147	CLAMP	1	1	1			
15	5SL–81960–00	RECTIFIER & REGULATOR ASSY	1	1	1			
16	92017–06025	BOLT, BUTTON HEAD	2	2	2			
17	90202–06001	WASHER, PLATE	2	2	2			
18	5PS–82576–01	EMERGENCY STOP SWITCH ASSY	1	1	1			
19	5SL–8591A–30	ENGINE CONTROL UNIT ASSY	1		1			
	5SL–8591A–20	ENGINE CONTROL UNIT ASSY		1				
20	5SL–82501–11	MAIN SWITCH STEERING LOCK	1	1	1			
21	4BH–82511–09	BLANK KEY	1	1	1			AP
22	90109–080G5	BOLT	2	2	2			
23	91317–04025	BOLT	2	2	2			
24	90201–042E0	WASHER, PLATE	2	2	2			
25	4TH–83371–00	HORN	1	1	1			
26	95807–06010	BOLT, FLANGE	1	1	1			

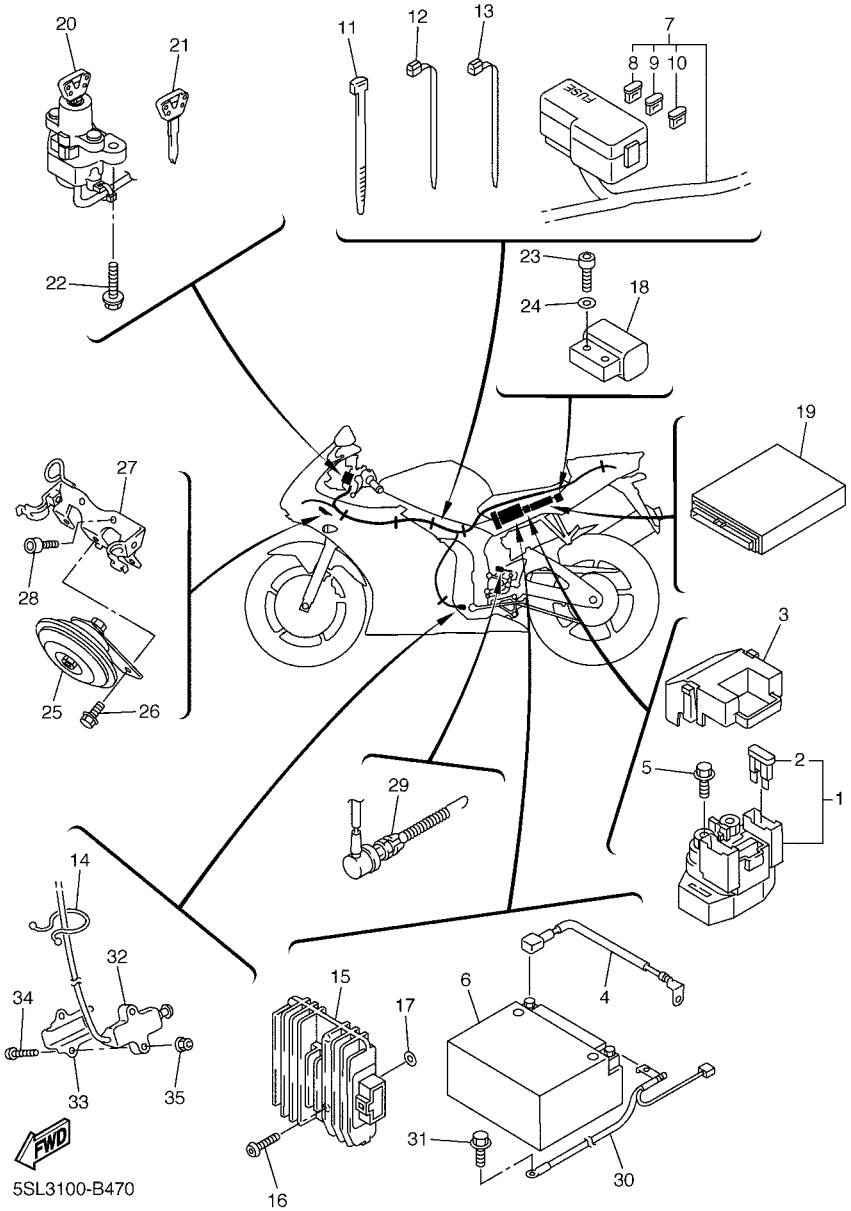

FIG. 47 ELECTRICAL 2

REF. NO.	PART NO.	DESCRIPTION	5SL3	5SL4	5SL5			REMARKS
27	5SL–23377–00	BRACKET, HORN	1	1	1			
28	91317–06012	BOLT	2	2	2			
29	5SL–82530–00	STOP SWITCH ASSY	1	1	1			
30	5SL–82116–00	WIRE, MINUS LEAD	1	1	1			
31	95027–06012	BOLT, FLANGE	1	1	1			
32	5PX–82566–70	SWITCH, SIDE STAND	1	1	1			
33	5JJ–82388–00	PLATE	1	1	1			
34	92017–05030	BOLT, BUTTON HEAD	2	2	2			
35	95607–05200	NUT, U FLANGE	2	2	2			

NUMERICAL INDEX

PART NO.	GRID NO.
5SL–11101–00	B – 2
4KG–1111G–00	B – 2
5EB–11133–10	B – 2
5SL–11165–00	C – 4
5SL–11181–00	B – 2
5SL–11191–00	B – 2
5SL–11193–00	B – 2
214–11198–01	B – 11
5SL–11411–00	B – 3
5EB–11416–00	B – 3
5EB–11416–10	B – 3
5EB–11416–20	B – 3
5EB–11416–30	B – 3
5EB–11416–A0	B – 3
5SL–11603–00	B – 3
5SL–11631–00	B – 3
5SL–11633–00	B – 3
5SL–11650–00	B – 3
5SL–11654–00	B – 3
5SL–11656–00	B – 3
5SL–11656–10	B – 3
5SL–11656–20	B – 3
5SL–11656–30	B – 3
5EB–12111–00	B – 4
5SL–12113–00	B – 4
5SL–12114–00	B – 4
5SL–12116–00	B – 4
5EB–12117–00	B – 4
1HX–12118–00	B – 4
4TV–12119–00	B – 4
5SL–12121–00	B – 4
5EB–12124–01	B – 4
5EB–12126–00	B – 4
5EB–12127–00	B – 4
5EB–12153–09	B – 5
5EB–12153–20	B – 5
5EB–12153–30	B – 5
1HX–12168–00	B – 4
1HX–12168–20	B – 4
1HX–12168–40	B – 4
1HX–12168–60	B – 4
1HX–12168–80	B – 4
1HX–12168–A0	B – 4
1HX–12168–F0	B – 4
1HX–12168–H1	B – 4
1HX–12168–K1	B – 4
1HX–12168–M1	B – 4
1HX–12168–R1	B – 4

PART NO.	GRID NO.
1HX–12168–U1	B – 4
1HX–12168–W1	B – 4
1HX–12168–Y1	B – 4
1HX–12169–11	B – 4
1HX–12169–31	B – 4
1HX–12169–50	B – 5
1HX–12169–70	B – 5
1HX–12169–90	B – 5
1HX–12169–E0	B – 5
1HX–12169–G0	B – 5
1HX–12169–J0	B – 5
1HX–12169–L0	B – 5
1HX–12169–N0	B – 5
1HX–12169–T0	B – 5
5SL–12170–00	B – 6
5EB–12176–00	B – 6
5SL–12180–00	B – 6
5SL–12210–10	B – 6
4FM–12213–00	B – 6
5BE–12241–00	B – 6
5EB–12251–00	B – 6
5EB–12252–10	B – 6
5SL–12405–00	B – 8
5SL–12410–00	B – 8
5EB–12413–00	B – 8
5EB–12421–00	B – 7
5SL–12422–00	B – 7
11H–12438–10	B – 7
5EB–12439–00	B – 7
5SL–1243A–00	B – 9
5SL–1243E–00	B – 9
5SL–1244E–00	B – 8
5SL–1244G–00	B – 9
5EB–12450–00	B – 7
5SL–12461–00	B – 8
5SL–12462–00	B – 8
5EB–12469–00	B – 7
5GV–1246A–00	B – 7
5GV–1246E–00	B – 7
	B – 8
5LV–1246F–00	B – 9
5Y9–12491–00	E – 13
5SL–12551–00	B – 8
5EB–12577–00	B – 7
5SL–12578–00	B – 8
4NK–12579–00	B – 7
5SL–12579–00	B – 8
5EB–12581–00	B – 7

PART NO.	GRID NO.
5SL–12582–00	B – 8
5SL–12588–00	B – 7
5SL–12589–01	B – 9
5EB–12659–00	B – 8
5EB–12668–00	B – 8
5GJ–12675–00	B – 8
5SL–12682–00	B – 13
5EB–12822–00	B – 11
5EB–13161–00	B – 10
5EB–1316E–00	B – 10
5MT–13300–00	B – 10
5SL–13410–00	B – 10
5SL–13414–00	B – 11
5EB–13415–00	B – 10
5JW–13416–00	B – 10
5SL–13417–00	B – 11
5EB–13418–00	C – 4
5GH–13440–00	B – 11
5EB–13470–00	B – 11
4JH–13473–00	B – 11
5EB–13475–00	B – 11
3KS–13490–00	B – 11
68V–13533–00	B – 15
4TV–13575–00	E – 15
5SL–13586–00	B – 12
5SL–13596–00	B – 12
5SL–13750–00	B – 14
5SL–13750–10	B – 14
5SL–13761–00	B – 14
5EB–13898–00	B – 10
5SL–13906–00	B – 14
5PW–13907–00	D – 12
5SL–13971–00	B – 15
5SL–13972–00	B – 15
5SL–14103–00	B – 14
5JW–14104–00	B – 14
5PW–1410F–00	B – 15
5PW–14112–00	B – 15
5JW–14118–00	B – 14
4LE–14137–00	B – 15
3H1–14147–00	B – 14
5FL–14147–00	B – 14
5SL–14148–00	B – 14
4KM–14216–00	B – 14
8CC–14216–10	B – 14
5PW–14251–00	B – 15
5SL–14348–00	B – 14
5FL–14348–10	B – 15

PART NO.	GRID NO.
5PW–14349–00	B – 15
5SL–14349–00	B – 15
5PW–14396–00	B – 15
5SL–14411–00	B – 12
5SL–14413–00	B – 15
5EB–1441F–01	B – 12
5SL–14421–00	B – 12
5CA–14435–00	B – 12
5SL–1443J–00	B – 13
5SL–14450–00	B – 12
5EB–14452–00	B – 12
5SL–14453–00	B – 12
5EB–14457–00	B – 12
5EB–14462–00	B – 12
5SL–14465–00	B – 15
5SL–14466–00	B – 15
5EB–14467–00	B – 12
5SL–14469–00	B – 12
5EB–1446F–00	E – 15
5SL–14477–00	B – 12
5SL–14479–00	B – 12
5JW–14589–00	B – 14
5SL–14602–00	C – 3
3YF–14613–01	C – 3
5SL–14710–10	C – 3
5SL–14714–00	C – 3
5EB–14733–00	D – 4
5SL–1482K–00	B – 2
5SL–14834–00	C – 2
5SL–14840–00	C – 2
5SL–14881–00	C – 2
5SL–14882–00	C – 2
5SL–14890–00	B – 2
5SL–14899–00	B – 2
4SV–14933–00	B – 14
5SL–14987–00	B – 14
5SL–15100–01	C – 4
11H–15138–00	B – 2
5EB–15155–00	C – 4
5EB–15163–01	C – 11
36Y–15189–00	C – 4
5SL–15189–00	C – 4
3F9–15362–00	C – 6
5EB–15362–00	C – 5
5SL–15373–00	B – 12
5SL–15377–00	C – 5
5SL–15411–00	C – 6
5SL–15413–00	C – 4

PART NO.	GRID NO.
5SL–15416–00	C – 6
5SL–15418–00	C – 6
5SL–15421–00	C – 6
5SL–15425–00	C – 6
5EB–15441–00	C – 7
5SL–15451–00	C – 6
5SL–15456–00	C – 6
5SL–15461–00	C – 6
5SL–15462–00	C – 4
5SL–15463–00	C – 7
5SL–15484–00	F – 5
5SL–15512–00	C – 8
5MT–15515–00	C – 8
5MT–15521–00	C – 8
5SL–15590–00	C – 8
5SL–16150–00	C – 9
5EB–16154–00	C – 9
1AE–16164–00	C – 9
4FN–16321–00	C – 9
5SL–16321–00	C – 9
168–16324–00	C – 9
3J2–16324–00	C – 9
5SL–16340–00	C – 9
132–16346–00	C – 14
5EB–16351–01	C – 9
5EB–16356–01	C – 9
5SL–16371–00	C – 9
5EB–16382–00	C – 9
5SL–17121–00	C – 11
5SL–17131–20	C – 11
5SL–17151–20	C – 11
5SL–17161–00	C – 11
5SL–17211–00	C – 12
5SL–17221–10	C – 11
5SL–17231–00	C – 12
5SL–17241–00	C – 11
5SL–17251–00	C – 12
5SL–17261–10	C – 11
5SL–17411–00	C – 11
5SL–17421–00	C – 11
278–17424–01	C – 12
5SL–17460–00	C – 12
5SL–18101–00	C – 14
5EB–18110–10	C – 14
5EB–18112–01	C – 14
5EB–18113–00	C – 14
5SL–18115–00	C – 14
5LV–18116–00	C – 14

PART NO.	GRID NO.
5SL–18127–00	C – 14
5SL–18140–00	C – 14
2H9–18154–00	C – 14
4XV–18154–00	C – 14
5SL–18511–00	C – 13
5MT–18512–00	C – 13
5EB–18513–00	C – 13
4XV–18531–00	C – 13
5EB–18536–00	C – 13
5SL–18540–00	C – 13
136–18542–00	C – 13
5SL–21110–00	C – 15
5SL–2117M–00	D – 2
5SL–2117V–00	C – 15
5SL–2117W–00	C – 15
5SL–21190–00	C – 15
5SL–21208–00	D – 2
5SL–21268–00	D – 2
5SL–21283–00	C – 15
3YX–21376–00	D – 3
5SL–2139X–00	D – 2
5SL–21446–10	C – 3
5SL–2144G–00	E – 12
5SL–21486–00	C – 15
5SL–21488–00	C – 15
5EB–21495–00	C – 15
5SL–21511–00–P1	D – 3
5SL–21511–00–P2	D – 3
5SL–21611–00–P1	D – 3
5SL–21611–00–P2	D – 4
5PW–2161G–00	D – 4
5SL–21629–10	D – 4
36Y–21639–00	D – 2
5SL–21639–00	D – 7
5SL–21646–00	D – 3
5SL–21647–00	D – 3
4XY–21649–00	E – 14
5SL–21649–00	C – 15
	F – 3
5SL–21650–00	D – 7
5SL–21669–00	D – 4
5PW–21688–00	D – 4
5SL–2172E–00	D – 5
5SL–2172W–00	D – 5
5MT–2172X–00	D – 3
5SL–21737–00	D – 5
5SL–21746–00	D – 5
5PW–2174X–00	D – 5

NUMERICAL INDEX

PART NO.	GRID NO.
5SL–2179R–00	D – 4
5SL–2179V–00	D – 4
26H–21828–00	D – 5
5SL–21871–00	D – 5
4NK–21875–00	D – 5
5SL–22110–00	D – 6
5PW–22125–00	D – 7
5JJ–22128–00	D – 6
4FN–22141–00	D – 7
5SL–22151–00	D – 6
5SL–2217A–00	D – 6
5SL–2217M–00	D – 6
5EB–22184–00	D – 6
5SL–22187–00	E – 9
5SL–2219X–00	D – 6
5SL–22210–10	D – 8
5SL–22210–20	D – 8
5SL–22219–00	D – 8
5SL–22311–00	D – 6
5SL–22381–00	D – 6
5SL–23102–00	D – 10
5SL–23103–00	D – 10
5SL–23110–00	D – 10
5MT–23111–00	D – 10
5SL–23118–00	D – 10
5EB–23125–00	D – 10
5SL–23126–00	D – 10
5SL–23136–00	D – 10
5SL–23141–00	D – 10
4PU–23144–00	D – 10
4PU–23145–01	D – 10
4V4–23146–L0	D – 10
3LR–23149–00	D – 10
3TJ–23149–10	D – 10
4V4–23153–L0	D – 10
2K8–23158–L0	D – 10
5SL–23170–00	D – 10
5EB–23171–00	D – 10
5MT–23173–00	D – 10
3LC–23181–00	D – 10
4V4–23188–L0	D – 10
5MT–23195–00	D – 10
4PU–2331G–00	D – 11
5SL–23340–00	D – 11
3LC–23357–00	D – 10
5SL–23377–00	F – 15
4XV–23415–01	D – 9
4XV–23418–00	D – 9

PART NO.	GRID NO.
4XV–2341B–00	D – 9
5SL–23435–10	D – 9
3FV–23462–00	D – 11
2H9–23469–00	E – 6
5EB–23818–00	D – 9
5SL–24129–00	D – 12
5SL–24139–00	D – 12
5SL–2413B–00	D – 12
5SL–2414H–00	D – 12
5SL–2414J–00	D – 13
5SL–2414K–00	D – 13
5SL–24170–00	D – 13
5RB–24180–00	D – 13
5SL–24182–00	D – 12
5SL–24183–00	D – 12
5SL–24191–00	D – 12
5PW–24192–00	D – 12
5SL–2419F–00	D – 13
5SL–24240–10	D – 12
5SL–24314–00	D – 13
3PA–24356–00	E – 7
68V–24376–00	B – 15
5SL–24411–00	B – 14
5JW–24486–00	D – 12
5SL–24491–00	D – 12
3LN–24515–00	B – 14
5JJ–24602–00	D – 12
5SL–2470F–00	D – 14
5SL–24710–00	D – 14
5SL–24720–00	D – 14
3KJ–24723–00	C – 15
	D – 3
5SL–24723–00	D – 14
5SL–24724–00	D – 14
5SL–24750–00	D – 14
5SL–24751–00	D – 14
5SL–24758–00	D – 14
5SL–24780–00	D – 14
5SL–24792–00	D – 14
5SL–2479R–00	D – 14
5SL–24858–00	D – 14
4XV–25117–00	D – 15
4XV–25118–00	D – 15
5SL–25168–00–98	D – 15
5SL–25181–00	D – 15
4XV–25186–00	D – 15
4XV–25317–00	E – 3
5SL–25327–00	E – 3

PART NO.	GRID NO.
5SL–25338–00–98	E – 3
5SL–25364–00	E – 3
5SL–25366–00	E – 3
5SL–25367–00	E – 3
4XV–25376–00	E – 3
5SL–25376–00	E – 3
5SL–25381–00	E – 3
5SL–25383–00	E – 3
5SL–25388–00	E – 3
5SL–25389–00	E – 3
5MT–25398–00	D – 15
	E – 3
5MT–25398–10	D – 15
	E – 3
5MT–25398–20	D – 15
	E – 3
5SL–25448–20	E – 3
5SL–2580T–00	E – 2
5SL–2580U–00	E – 2
5SL–2580W–00	E – 5
5SL–2581T–00	E – 2
5SL–25827–00	E – 5
5SL–25827–10	E – 5
5SL–25828–00	E – 5
5SL–2582A–00	E – 12
5PW–2582F–00	E – 7
5SL–2582W–00	E – 5
5SL–25838–00	E – 5
5SL–2583V–00	E – 12
5SL–25852–00	E – 12
3GM–25852–50	E – 7
3FV–25854–00	E – 7
5SL–25854–00	E – 12
5SL–25855–00	E – 12
2J2–25855–50	E – 7
4BP–2585F–00	E – 12
2VN–25866–00	E – 7
56A–25867–00	E – 7
5SL–25872–00	E – 7
5SL–25873–00	E – 7
5SL–25874–00	E – 12
5SL–25876–00	E – 8
5SL–25886–00	E – 7
5SL–25887–00	E – 7
5SL–25894–00	E – 12
5SL–25894–10	E – 7
5SL–25895–00	E – 12
3FV–2589A–00	E – 7

PART NO.	GRID NO.
3FV–2589F–00	E – 7
3FV–2589G–00	E – 7
3GM–2589H–00	E – 7
5SL–25914–00	E – 5
5DH–25916–00	E – 5
3JD–25917–00	E – 5
5SL–25917–00	E – 5
4SV–25919–00	E – 2
5SL–25919–00	E – 5
5SL–25921–00	E – 5
4SV–25924–00	E – 2
8CR–25924–00	E – 5
3GM–25925–00	E – 2
5SL–25926–00	E – 5
5SL–26121–00	E – 6
5SL–26122–00	E – 6
5SL–26240–00	E – 6
4YR–26241–01	E – 6
5EB–26246–00	E – 6
5SL–26280–00	E – 15
5SL–26290–00	E – 15
5SL–26292–00	E – 8
5SL–26298–00	E – 15
5SL–26311–00	E – 6
5SL–26312–00	E – 6
5EB–26332–00	E – 7
5SL–26335–00	E – 6
5SL–27211–00	E – 12
5SL–27222–00	E – 12
5SL–27311–00	E – 9
5JJ–27315–00	E – 9
5SL–27321–00	E – 9
4NX–27351–00	E – 9
5PW–27352–00	E – 9
5JJ–27411–01	E – 10
1HX–27415–00	F – 3
5SL–27424–00	E – 11
5SL–27430–00	E – 10
4BP–27434–01	E – 9
5JJ–27437–00	E – 10
5SL–27440–00	E – 10
5SL–27442–00	E – 9
5SL–27443–00	E – 10
5SL–27445–00	E – 9
5SL–27446–00	E – 10
5SL–27451–00	E – 9
5SL–27461–00	E – 10
5SL–28100–00	D – 4

PART NO.	GRID NO.
5SL–28301–20	F – 2
5SL–28303–20	F – 2
5SL–28315–20	E – 14
5SL–28315–30	E – 14
5SL–28328–30	F – 2
5SL–28328–41	F – 2
5SL–2832P–00	E – 14
1AE–2834E–00	D – 3
5SL–2834E–00	F – 3
5SL–2834F–00	F – 3
5SL–28356–00	E – 14
5SL–28368–01	F – 2
5EB–2836A–00	B – 11
5EB–2836E–00	B – 11
5SL–2836K–00	F – 2
5SL–2836L–00	F – 2
5SL–2836M–00	F – 4
5SL–2836T–00	F – 2
5SL–2836U–00	F – 2
5SL–28371–00	E – 15
5SL–2837J–00	F – 3
5SL–2837K–00	F – 3
5SL–2837L–01	E – 14
5SL–2837M–01	E – 14
5SL–2837N–00	F – 9
5SL–2838E–00	E – 15
5SL–2838G–00	F – 3
5SL–2838R–00	E – 15
5SL–2838T–00	E – 15
5PW–2839H–00	F – 2
5SL–28415–00	C – 15
5SL–28416–00	E – 14
5SL–28428–00	E – 14
5SL–28429–00	E – 14
5SL–2843J–00	F – 3
5SL–2844J–00	F – 3
5SL–2848K–00	F – 3
5SL–81410–00	F – 5
5SL–81450–00	F – 5
5SL–81670–00	F – 12
5SL–81673–00	F – 12
4WP–81801–00	F – 6
4WP–81826–00	F – 6
4XV–8182A–00	F – 6
5SL–8183G–00	F – 6
4WP–81844–00	F – 6
1FK–81847–00	F – 6
5EB–81890–00	F – 6

PART NO.	GRID NO.
5SL–81940–10	F – 14
5PW–81950–00	F – 12
5EA–81950–20	F – 12
5JJ–81950–20	F – 12
5EA–81952–00	F – 12
5JJ–81952–00	F – 12
5SL–81960–00	F – 14
5FL–82100–01	F – 14
5SL–82115–00	F – 14
5SL–82116–00	F – 15
5SL–82119–10	F – 14
5SL–8212B–00	D – 3
5JJ–82131–00	D – 4
5EA–82151–00	F – 14
5JJ–82151–10	F – 14
5JJ–82151–20	F – 14
5JJ–82151–30	F – 14
5SL–82309–00	F – 12
5SL–82309–10	F – 12
5SL–82310–00	F – 12
5SL–82310–20	F – 12
5JW–82380–00	B – 14
	F – 12
5SL–82386–00	B – 15
5JJ–82388–00	F – 15
5SL–82501–11	F – 14
4BH–82511–09	F – 14
5SL–82530–00	F – 15
3GB–82540–01	F – 12
5MT–82541–00	F – 12
5PX–82566–70	F – 15
5PS–82576–01	F – 14
5SL–82590–10	F – 14
3MA–82591–00	E – 7
	F – 14
5EB–82910–03	F – 11
4XV–82917–01	F – 11
5PW–83310–10	F – 7
5PW–83318–00	F – 7
5PW–83320–10	F – 7
5PW–83330–10	F – 7
5GJ–83331–00	F – 7
5PW–83331–00	F – 7
5PW–8333A–10	F – 7
5PW–83340–10	F – 7
5PW–8334A–10	F – 7
4MY–83350–01	F – 12
4TH–83371–00	F – 14

PART NO.	GRID NO.
4XV–83513–00	E – 14
5PW–8352S–00	F – 8
5PW–8353E–00	F – 8
5SL–83570–20	F – 8
5SL–83570–30	F – 8
5PW–83572–00	F – 8
5EB–83755–00	F – 12
5EB–83912–01	F – 11
4XV–83913–00	F – 11
5SL–83922–00	E – 7
4XV–83945–00	F – 11
5SL–83973–00	F – 11
5SL–83975–00	F – 11
4HM–83980–00	E – 7
5SL–84196–00	F – 9
5SL–84300–20	F – 9
4SV–84314–00	F – 9
5SL–84359–10	F – 9
5SL–84396–00	F – 9
5SL–84397–00	F – 9
1FK–84527–00	E – 14
5SL–84710–10	F – 10
4HC–84744–00	F – 10
5PW–84745–01	F – 10
5MT–84751–00	D – 4
5SL–84753–00	F – 10
20G–85110–00	F – 13
5SL–85112–00	F – 13
3Y6–85130–02	D – 4
5SL–85720–00	F – 12
8CC–85790–01	F – 12
5SL–85885–00	B – 14
5CA–85886–00	B – 12
5PW–85896–01	F – 12
5SL–8591A–20	F – 14
5SL–8591A–30	F – 14
5MT–W0041–00	E – 7
3TU–W0042–51	E – 12
5SL–W0045–00	E – 2
5SL–W0046–00	E – 5
5SL–W0047–00	E – 5
3GM–W0047–10	E – 2
3MA–W0047–10	E – 2
1J3–W0048–00	E – 2
1UY–W0048–00	E – 5
4SV–W0057–00	E – 2
5SL–W0057–00	E – 5
4SV–W0057–10	E – 2

PART NO.	GRID NO.
5SL–W2470–00	D – 14
5EB–W2587–01	E – 7
5SL–Y2171–40–P1	D – 5
5SL–Y2171–50–P2	D – 5
5SL–Y2410–30–02	D – 12
5SL–Y2808–00–P0	F – 2
5SL–Y2808–20–P2	F – 3
5SL–Y2809–00–P0	F – 3
5SL–Y2809–20–P2	F – 3
5SL–Y283G–20–P2	E – 14
5SL–Y283G–40–P1	E – 14
5SL–Y283U–50–P1	F – 2
5SL–Y283U–60–P0	F – 2
5SL–Y283V–50–P1	F – 2
5SL–Y283V–60–P0	F – 2
5SL–Y2881–10	E – 14
5SL–Y2881–20	E – 14
5SL–YK241–M0–P0	D – 12
90101–08662	E – 9
90101–08766	E – 4
90105–06006	C – 4
90105–06020	C – 2
90105–06027	B – 2
90105–06040	B – 8
90105–06041	E – 8
90105–07342	B – 6
90105–08052	E – 14
90105–08053	E – 11
90105–08054	C – 3
90105–08386	F – 12
90105–086A9	C – 4
90105–087A0	C – 4
90105–10017	D – 6
	D – 8
90105–10018	D – 7
	D – 8
90105–10042	C – 15
90105–105A7	E – 2
90105–106A2	D – 2
90105–126A8	F – 5
90105–14002	D – 15
90109–06013	E – 12
90109–06014	C – 6
90109–06015	C – 6
90109–06031	B – 10
	C – 6
90109–064G6	E – 2
90109–065G3	C – 4

PART NO.	GRID NO.
90109–066F0	B – 2
90109–08018	E – 9
90109–08045	E – 5
90109–080G5	F – 14
90109–085G6	E – 10
90109–105G7	E – 9
90110–05014	D – 12
90110–05112	D – 12
90110–05201	D – 5
90110–06018	C – 13
90110–06020	B – 11
90110–06041	B – 10
90110–06071	C – 6
90110–06072	F – 12
90110–06073	B – 2
90110–06079	D – 12
90110–06091	C – 4
90110–06102	D – 6
90110–06149	B – 7
90110–06200	D – 13
90110–06258	D – 14
90110–08220	E – 11
90110–10007	C – 15
90110–10008	C – 15
90111–05002	D – 5
	F – 3
90111–05003	E – 15
	F – 2
90111–05006	C – 15
90111–06007	D – 3
90111–06019	C – 14
90111–06038	D – 6
90111–06040	D – 3
	F – 2
90111–06041	E – 8
90116–10485	E – 3
90119–05001	E – 15
90119–06059	D – 5
90119–06062	D – 12
90119–06117	D – 9
90119–06172	B – 13
90119–06192	E – 9
90119–10003	B – 2
90149–05244	E – 8
90149–06020	C – 4
90149–06031	F – 5
90149–06233	E – 9
90149–06250	F – 5

PART NO.	GRID NO.
90149–08003	F – 5
90149–08296	E – 10
90149–10006	C – 15
90149–10007	C – 15
90150–04041	D – 4
90150–05024	E – 14
90151–06008	C – 11
90159–06002	C – 9
90159–06056	E – 12
90160–05006	F – 9
90160–05007	E – 14
90164–05014	F – 8
90167–05078	E – 14
90170–08358	C – 14
90170–20008	C – 9
90170–28419	D – 9
90176–06008	E – 15
90176–06055	D – 3
90179–05523	E – 14
90179–07652	B – 3
90179–08410	C – 3
90179–10696	C – 15
90179–18667	C – 12
90179–30691	D – 9
90183–04039	D – 3
90183–05024	E – 14
	F – 3
90183–05061	E – 14
	F – 3
90183–05076	D – 3
	D – 5
90183–050A0	D – 5
	E – 8
90183–06053	D – 3
90185–10002	C – 15
90185–10009	E – 3
90185–18104	D – 7
90185–24165	E – 4
90201–042E0	F – 14
90201–05725	D – 4
90201–06008	D – 14
90201–06042	E – 10
90201–06057	D – 4
90201–06071	B – 8
90201–06380	E – 13
90201–08034	E – 11
90201–081R9	E – 9
90201–08326	E – 9

PART NO.	GRID NO.
90201–086J0	E – 6
90201–08753	F – 12
90201–08759	F – 13
90201–087K3	C – 4
90201–10021	E – 3
90201–10118	E – 8
	E – 12
90201–101J1	D – 8
	E – 9
90201–10614	C – 9
90201–12008	F – 5
90201–12013	C – 14
90201–12790	F – 12
90201–13008	E – 10
90201–146F9	E – 9
90201–154E8	C – 14
90201–177G4	C – 14
90201–186M4	D – 7
90201–20278	C – 12
90201–255A6	C – 9
90201–257R5	E – 4
90201–281U8	D – 9
90202–05088	E – 15
90202–05180	E – 15
	F – 2
90202–06001	F – 14
90202–08001	D – 14
90202–30235	D – 9
90206–12074	C – 14
90209–21332	C – 11
90209–21351	C – 11
90209–22352	C – 11
90209–25342	C – 11
90209–25349	C – 11
90209–25350	C – 11
90215–20004	C – 9
90215–21290	C – 12
90240–08084	E – 9
90243–08029	E – 10
90269–06001	F – 10
90269–06008	E – 15
	F – 2
	F – 9
90269–07076	D – 5
90269–07077	D – 2
	D – 4
	D – 5
90338–06018	D – 3

PART NO.	GRID NO.
90338–06018	D – 5
90338–08174	B – 12
90338–08226	D – 3
90338–27007	C – 15
90340–14132	B – 11
90340–20090	B – 2
90340–32004	C – 6
90387–050X4	C – 15
90387–06009	D – 6
90387–06022	D – 3
90387–06023	E – 13
90387–06054	D – 12
90387–06055	D – 12
90387–06057	D – 3
	E – 8
	E – 15
	F – 2
90387–062L2	D – 13
90387–062X0	D – 6
90387–065G0	D – 4
90387–065J6	B – 13
90387–06681	D – 6
90387–06697	E – 10
90387–07391	B – 8
90387–073M0	E – 9
90387–07717	D – 7
90387–08020	E – 11
90387–1012A	D – 6
	D – 8
90387–1013U	D – 7
90387–2202V	C – 12
90387–2504A	C – 11
90387–2513E	C – 11
90387–253M6	C – 11
90387–2813C	C – 11
90387–2813D	C – 11
90401–10160	E – 8
90401–10172	E – 8
	E – 12
90401–20145	B – 11
90413–08012	B – 15
90430–06014	B – 7
90430–08119	B – 2
90430–08143	C – 6
90430–09002	B – 14
90430–10148	F – 12
90445–08016	B – 8
90445–08376	D – 5

PART NO.	GRID NO.
90445–102G9	D – 12
90445–11418	D – 13
90445–11732	D – 13
90445–11795	B – 12
90445–19002	E – 9
90446–08001	E – 12
90446–15386	E – 12
90450–22017	B – 7
	B – 9
90450–25037	B – 9
90450–32001	B – 7
	B – 9
90450–35001	B – 7
	B – 8
90450–38040	B – 7
90450–53002	B – 12
90450–63001	B – 12
90460–59211	E – 15
90461–10006	C – 6
90464–07259	D – 3
90464–12036	D – 2
90464–13077	F – 14
90464–13249	D – 3
90464–15157	E – 6
90464–15195	D – 2
	E – 6
	F – 14
90464–16005	B – 15
90464–16011	D – 6
90464–16012	D – 6
90465–08395	C – 6
90465–10030	B – 11
90465–14011	C – 6
90465–18147	F – 14
90467–010A0	E – 12
90467–08003	D – 5
90467–08075	B – 8
90467–10008	B – 13
	B – 15
	D – 12
90467–10041	B – 12
90467–11090	B – 9
90467–12003	B – 15
90467–14015	C – 4
90467–15001	B – 14
90467–15012	B – 14
90467–15054	B – 12
90467–17128	B – 13

PART NO.	GRID NO.
90467–17128	C – 2
90467–180A0	C – 2
90467–18172	C – 2
90480–12314	B – 12
90480–12607	E – 13
90480–13018	D – 13
90480–13398	C – 15
90480–14003	D – 3
	F – 2
90480–15363	B – 8
90480–15483	D – 12
90501–064L1	C – 13
90501–12743	E – 10
90501–237L0	C – 9
90506–14003	C – 14
90506–18008	E – 9
90506–20193	E – 12
90508–165B1	C – 10
90508–18134	E – 9
90508–18135	E – 10
90508–295B2	C – 14
90560–25270	C – 9
91314–06025	C – 4
	C – 6
91314–06035	E – 10
91314–08025	D – 11
91314–08030	D – 9
	E – 6
91314–08040	D – 10
91317–04025	F – 14
91317–05010	D – 12
91317–05012	C – 15
	D – 3
91317–05014	E – 6
91317–06012	E – 8
	E – 9
	F – 15
91317–06016	F – 12
91317–06020	B – 8
	B – 12
	E – 6
91317–06025	B – 6
	B – 11
91317–06060	B – 2
91401–16012	E – 12
91401–25015	E – 9
91701–06018	E – 12
91808–17032	B – 10

PART NO.	GRID NO.
92014–06025	D – 3
92014–08014	C – 6
92017–05016	F – 13
92017–05030	F – 15
92017–06014	D – 14
92017–06016	D – 6
	E – 13
92017–06020	D – 4
92017–06025	D – 14
	F – 14
92902–04100	E – 7
92902–04600	E – 7
92906–05100	B – 14
92906–05600	B – 14
92907–06200	E – 12
92907–08600	C – 9
93101–12004	C – 14
93101–12173	B – 7
93102–15212	C – 9
93102–35423	C – 12
93106–28043	D – 15
93106–40013	E – 3
93109–17071	D – 6
	D – 8
93210–04092	C – 4
93210–06667	B – 10
93210–09165	B – 10
	C – 5
93210–14003	B – 10
93210–14579	C – 4
93210–15566	B – 11
93210–15620	E – 7
93210–16325	C – 4
93210–27194	C – 6
93210–32172	C – 6
93210–33133	B – 7
93210–47675	B – 7
93306–00106	B – 7
93306–00304	C – 9
93306–00420	D – 15
93306–20464	C – 11
93306–20531	E – 3
93306–30525	C – 11
93306–30546	C – 11
93310–340N8	C – 9
93315–31502	C – 9
93315–31758	D – 6
	D – 8

PART NO.	GRID NO.
93315–41762	D – 6
93315–42536	D – 6
93317–11020	C – 9
93317–11287	C – 14
93317–42550	D – 6
93317–43580	E – 3
93399–99932	D – 11
93399–99955	D – 9
93420–61M07	E – 3
93440–10153	B – 2
93440–25185	C – 11
93440–28062	C – 11
93450–17129	B – 3
93501–04011	E – 10
93607–44190	B – 6
93608–17263	C – 6
93900–00030	D – 15
	E – 3
94112–17062	D – 15
94118–17033	E – 3
94580–25080	B – 10
94591–49120	B – 6
94681–55031	E – 4
94701–00402	B – 2
95024–06020	B – 7
95024–08035	C – 3
95027–06008	F – 14
95027–06012	F – 15
95027–06016	F – 12
95027–06020	B – 7
	F – 11
95027–06040	F – 6
95027–08012	B – 2
95304–06700	C – 14
95307–08600	E – 4
95307–08700	E – 12
95604–06200	E – 10
95606–06100	E – 7
95607–04100	D – 4
95607–05100	D – 4
95607–05200	F – 15
95607–06100	D – 4
	F – 11
95607–06200	D – 14
95607–08200	E – 11
95607–10200	D – 6
	D – 8
	E – 9

PART NO.	GRID NO.
95607–14200	D – 8
95617–08625	B – 2
95707–05500	D – 4
	F – 13
95707–06500	D – 3
95807–06010	F – 14
95814–08045	C – 3
95817–06045	C – 4
95817–06055	C – 4
95817–06065	C – 4
95817–06100	C – 4
95817–08065	C – 4
95824–06020	C – 14
95827–06012	B – 8
95827–06090	D – 12
97706–04012	F – 7
	F – 10
97707–50016	E – 14
	F – 4
97707–50120	B – 12
97707–60020	D – 3
98502–04012	E – 7
98506–05016	B – 14
98507–04010	F – 11
98507–05008	B – 14
98507–05025	B – 12
	F – 11
98507–05030	F – 11
98507–06012	C – 6
98707–03016	F – 11
98907–05008	D – 12
99001–07600	C – 9
99001–09600	C – 9
99009–12400	B – 7
99009–17400	C – 14
99241–00080	D – 5
99241–00280	F – 3
99247–00080	D – 5
99247–00280	F – 3
99530–08012	B – 11
	C – 6
99530–10014	C – 4
99530–10114	B – 2
9Y581–55115	E – 4

PART NO.	GRID NO.